TOZEN
A joint reliance

VALVE for General Application

BUTTERFLY, CHECK, BALL, GATE, STRAINER

WAFER TYPE BUTTERFLY VALVE

SPECIFICATION

SUITABLE TO MULTI STANDARD
FACE-TO-FACE DIMENSION TO BS 5155/ BS EN 558-1 Sr.20
LEVER/WORM GEAR OPERATOR

PRESSURE / TEMPERATURE RATINGS

Working Pressure	16 bar
Testing Pressure	Shell : 1.5 times Seat : 1.1 times
Working Temperature	-20°C to 110°C (EPDM Seat) -10°C to 80°C (NBR Seat)
Suitable Media	Water & Oil

MATERIALS

Part	Material	BS EN *
Body	Cast Iron Ductile Iron	1561 GJL-250 1563 GJS- 400-18
Disc	Ductile Iron Aluminium Bronze Stainless Steel 304 Stainless Steel 316	1563 GJS- 400-18 1982 CC491K 10283 GX5CrN 19-10 10283 GX5CrNiMo19-11-2
Sear Ring	EPDM NBR	
Shaft	Stainless Steel 410 Stainless Steel 431	10088-3 X12Cr13 10088-3 X17CrNi16-2
O-Ring	NBR	
Bushing	Resin	

* Indicates the corresponding equivalent standard material for ASTM.

DIMENSIONS

Unit: mm

Size	L	A	B	C	D	E	F
50	43	66	183	215	270	150	145
65	46	78	193	215	280	150	145
80	46	99	201	215	288	150	145
100	52	115	226	235	310	150	145
125	56	131	242	260	323	150	145
150	56	145	257	260	338	150	145
200	60	173	301	355	450	210	280
250	68	210	342	355	491	210	280
300	78	242	387	355	536	200	280
350	78	270	-	-	561	200	280

BFV-W

PN16

DN50~DN350

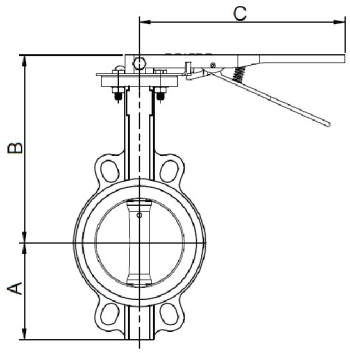

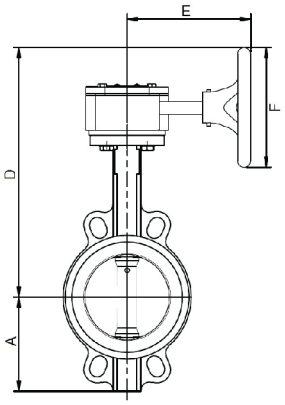

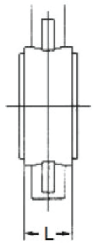

WAFER TYPE BUTTERFLY VALVE

SPECIFICATION

SUITABLE TO MULTI STANDARD

FACE-TO-FACE DIMENSION TO BS 5155 / BS EN 558-1 Sr.20

DOUBLE-STAGE WORM GEAR OPERATOR

PRESSURE / TEMPERATURE RATINGS

Working Pressure	16 bar (400mm ~ 600mm) 10 bar (700mm ~ 1200mm)
Testing Pressure	Shell : 1.5 times Seat : 1.1 times
Working Temperature	-20°C to 110°C (EPDM Seat) -10°C to 80°C (NBR Seat)
Suitable Media	Water & Oil

DIMENSIONS

Unit: mm

Size	L	A	D	E	F
400	102	307	680	243	280
450	114	336	706	243	280
500	127	373	747	243	280
600	154	429	885	296	385
650	165	468	880	296	385
700	165	523	1016	336	420
750	190	546	1032	336	420
800	190	581	1057	336	420
900	203	638	1108	357	420
1000	216	705	1196	357	420
1100	254	780	1285	450	420
1200	254	846	1397	450	420

Note:

1. Size 50mm~500mm are suitable for JIS10K, PN10, PN16 & ANSI Class 125, size 600mm & above are available for PN10/PN16 & ANSI Class 125.
2. Actuator mounting flange conforms to ISO 5211 drilling.
3. The butterfly valve can be supplied with electric actuator.
4. Micro switch / limit switch box are available upon request.
5. Gear operated with chain wheel are available upon request.
6. Design and specifications are subject to change without prior notice.

BFV-W

PN16

DN400~DN600

PN10

DN700~DN1200

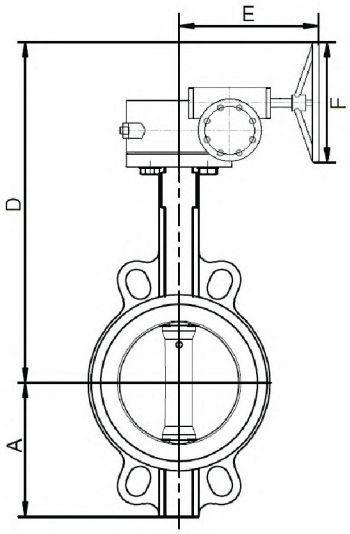

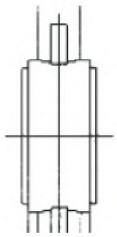

WAFER TYPE BUTTERFLY VALVE

SPECIFICATION

FOR BS EN 1092-2 (BS4504) PN25 FLANGE MOUNTING
FACE-TO-FACE DIMENSION TO BS 5155 / BS EN 558-1 Sr.20
LEVER / WORM GEAR OPERATOR

PRESSURE / TEMPERATURE RATINGS

Working Pressure	25 bar
Testing Pressure	Shell : 1.5 times Seat : 1.1 times
Working Temperature	-20°C to 110°C (EPDM Seat) -10°C to 80°C (NBR Seat)
Suitable Media	Water & Oil

MATERIALS

Part	Material	BS EN *
Body	Ductile Iron	1563 GJS-500-7
Disc	Ductile Iron Aluminium Bronze Stainless Steel 304 Stainless Steel 316	1563 GJS 400-18 1982 CC491K 10283 GX5CrNi19-10 10283 GX5CrNiMo19-11-2
Sear Ring	EPDM NBR	
Shaft	Stainless Steel 304	10088-3 X17CrNi16-2
Taper Pins	Stainless Steel 316	10088-3 X5CrNiMo17-12-2
O-Ring	NBR	
Bushing	Resin	

* Indicates the corresponding equivalent standard material for BS EN.

DIMENSIONS

Unit: mm

Size	L	A	B	C	D	E	F
50	43	80	186	215	270	150	145
65	46	93	196	215	280	150	145
80	46	99	204	215	288	150	145
100	52	115	226	235	310	150	145
125	56	135	242	260	323	150	145
150	56	154	257	260	338	150	145
200	60	182	301	355	450	207	280
250	68	212	342	355	491	207	280
300	78	248	387	355	536	203	280
350	78	289	-	-	561	203	280

BFV-WB-25

PN25

DN50~DN350

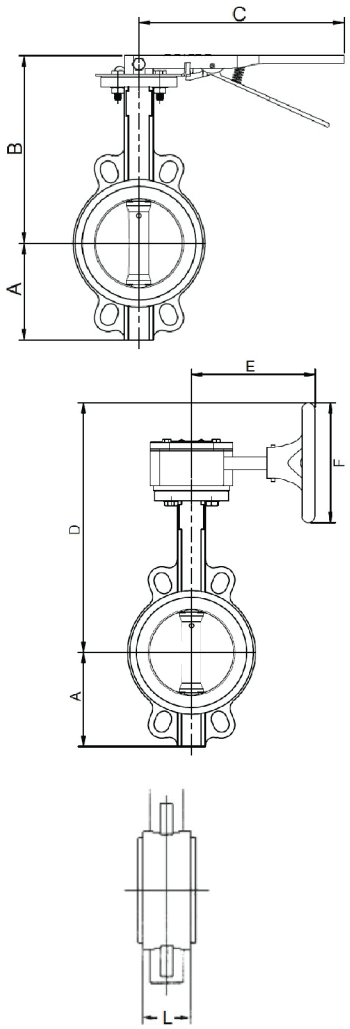

WATER TYPE BUTTERFLY VALVE

SPECIFICATION

FOR BS EN 1092-2 (BS4504) PN25 FLANGE MOUNTING
FACE-TO-FACE DIMENSION TO BS 5155 / BS EN 558-1 Sr.20
DOUBLE-STAGE WORM GEAR OPERATOR

PRESSURE / TEMPERATURE RATINGS

Working Pressure	25 bar
Testing Pressure	Shell : 1.5 times Seat : 1.1 times
Working Temperature	-20°C to 110°C (EPDM Seat) -10°C to 80°C (NBR Seat)
Suitable Media	Water & Oil

DIMENSIONS

Unit: mm

Size	L	A	D	E	F
400	102	328	680	243	280
450	114	358	724	243	280
500	127	393	759	243	280
600	154	445	888	296	385

Note:
1. Actuator mounting flange conforms to ISO 5211 drilling.
2. The butterfly valve can be supplied with electric actuator.
3. Micro switch / limit switch box are available upon request.
4. Gear operated with chain wheel are available upon request.
5. Design and specifications are subject to change without prior notice.

BFV-WB25
PN25

DN400~DN600

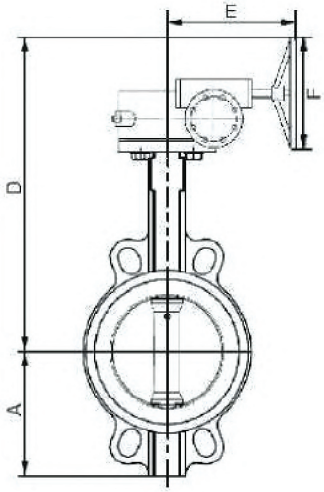

LUG TYPE BUTTERFLY VALVE

SPECIFICATION

FOR ANSI CLASS 125 FLANGE MOUNTING
FACE-TO-FACE DIMENSION TO ISO 5752 / BS 5155 / BS EN 593
LEVER / WORM GEAR OPERATOR

PRESSURE / TEMPERATURE RATINGS

Working Pressure	16bar
Testing Pressure	Shell: 1.5 times Seat: 1.1 times
Working Temperature	-20ºC to 110ºC (EPDM Seat) -10ºC to 80ºC (NBR Seat)
Suitable Media	Water & Oil

MATERIALS

Part	Material	ASTM
Body	Cast Iron Ductile Iron	A126 Class B A536 Gr.65-45-12
Disc	Ductile Iron Aluminium Bronze Stainless Steel 304 Stainless Steel 316	A536 Gr.65-45-12 B 148-97 C95400 A351 CF-8 A351 CF-8M
Seat Ring	EPDM NBR	
Shaft	Stainless Steel 410 Stainless Steel 431	S41000 S43100
O-Ring	NBR	
Bushing	PTFE	

DIMENSIONS

Unit: mm

Size	A	B	C	D	E	G
50	43	66	183	215	270	145
65	46	78	193	215	280	145
80	46	103	201	215	288	145
100	52	115	226	235	310	145
125	56	126	242	260	323	145
150	56	139	257	260	338	145
200	60	173	301	355	445	280
250	68	210	342	355	486	280
300	78	242	387	355	533	280
350	78	270	-	-	558	280
400	102	307	-	-	676	385
450	114	336	-	-	702	385

BFV-LA

PN16

DN50~DN450

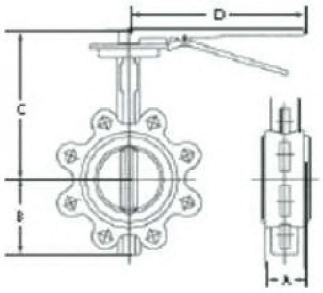

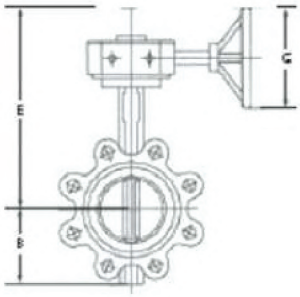

LUG TYPE BUTTERFLY VALVE

SPECIFICATION

FOR ANSI CLASS 125 FLANGE MOUNTING
FACE-TO-FACE DIMENSION TO ISO 5752 / BS 5155 / BS EN 593
DOUBLE-STAGE WORM GEAR OPERATOR

PRESSURE / TEMPERATURE RATINGS

Working Pressure	16bar
Testing Pressure	Shell: 1.5 times Seat: 1.1 times
Working Temperature	-20°C to 110°C (EPDM Seat) -10°C to 80°C (NBR Seat)
Suitable Media	Water & Oil

DIMENSIONS

Unit: mm

Size	A	B	E	F	G
500	127	373	733	260	280
600	154	429	877	300	385

Note:

1. Actuator mounting flange conforms to ISO 5211 drilling.
2. The butterfly valve can be supplied with electric actuator.
3. Micro switch / limit switch box are available upon request.
4. Others flange standard available upon request.
5. Design and specifications are subject to change without prior notice.

BFV-LA

PN16

DN500~DN600

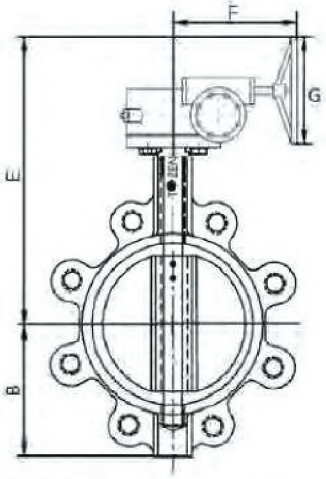

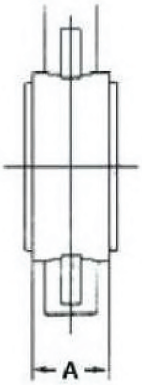

DOUBLE FLANGE BUTTERFLY VALVE (CONCENTRIC TYPE)

SPECIFICATION

FLANGED TO BS EN 1092-2 (BS4504) PN16 OR ANSI150#
FACE-TO-FACE DIMENSION TO BS 5155 / BS EN558-1 Sr. 20
LEVER / WORM GEAR OPERATOR

PRESSURE / TEMPERATURE RATINGS

Working Pressure	16 bar
Testing Pressure	Shell : 1.5 times Seat : 1.1 times
Working Temperature	-20°C to 110°C (EPDM Seat) -10°C to 80°C (NBR Seat)
Suitable Media	Water & Oil

MATERIALS

Part	Material	BS EN *
Body	Ductile Iron	1563 GJS- 400-18
Disc	Ductile Iron Aluminium Bronze Stainless Steel 304 Stainless Steel 316	1563 GJS- 400-18 1982-CC333G 10283 GX5C1Ni19-10 10283 GX5CrNiMo19-11-2
Sear Ring	EPDM NBR	
Shaft	Stainless Steel 410	10088 X12Cr13
Taper Pins	Stainless Steel 304	10088 X5CrNi18-10
O-Ring	NBR	
Bushing	Resin	

* Indicates the corresponding equivalent standard material for BS EN.

DIMENSIONS

Unit: mm

Size	A	B	C	D	G
50	108	69	126	215	150
65	112	72	136	215	150
80	114	88	146	215	150
100	127	96	158	235	150
125	140	115	179	260	150
150	140	151	210	260	150
200	152	161	230	355	300
250	165	199	271	355	300
300	178	215	305	355	300
350	190	261	353	-	300

BFV-DC
PN16

DN50~DN350

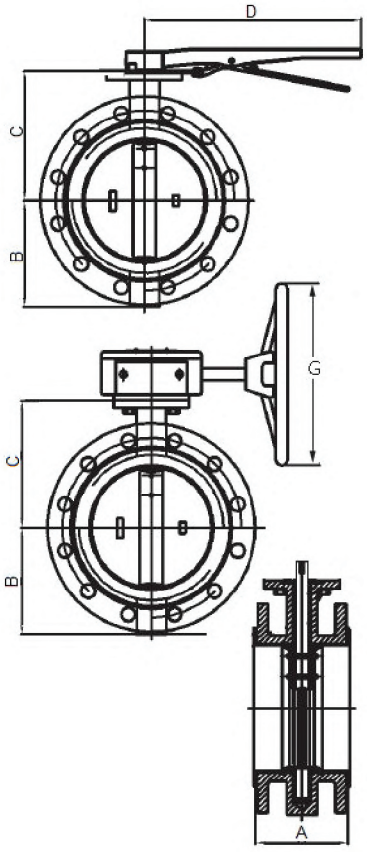

DOUBLE FLANGE BUTTERFLY VALVE (CONCENTRIC TYPE)

SPECIFICATION

FLANGED TO BS EN 1092-2 (BS 4504) PN16 OR ANSI150#
FACE-TO-FACE DIMENSION TO BS 5155 / BS EN 558-1 Sr.20
DOUBLE-STAGE WORM GEAR OPERATOR

PRESSURE / TEMPERATURE RATINGS

Working Pressure	16 bar (DN400~DN700) 10 bar (DN800 ~ DN1200)
Testing Pressure	Shell: 1.5 times Seat: 1.1 times
Working Temperature	-20ºC to 110ºC (EPDM Seat) -10ºC to 80ºC (NBR Seat)
Suitable Media	Water & Oil

DIMENSIONS

Unit: mm

Size	A	B	C	G
400	216	290	381	360
450	222	326	392	360
500	229	358	441	360
600	267	413	509	360
700	292	521	568	360
750	308	530	580	360
800	318	568	641	360
900	330	612	692	450
1000	410	665	735	450
1100	450	743	830	450
1200	470	792	917	570

Note:

1. Actuator mounting flange conforms to ISO 5211 drilling.
2. The butterfly valve can be supplied with electric actuator.
3. Micro switch / limit switch box are available upon request.
4. Gear operated with chain wheel are available upon request.
5. Design and specifications are subject to change without prior notice.

BFV-DC

PN16

DN400~DN700

PN10

DN800~DN1200

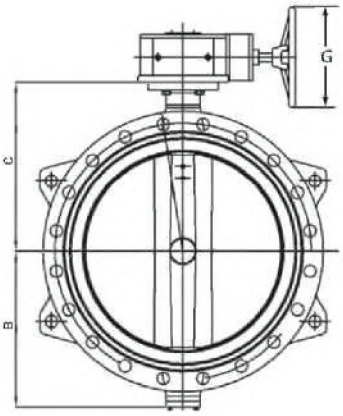

LUG TYPE BUTTERFLY VALVE

SPECIFICATION

FOR BS EN 1092-2 (BS4504) PN25 FLANGE MOUNTING
FACE TO FACE DIMENSION TO ISO 5752 BS 5155 / BS EN 593
LEVER / WORM GEAR OPERATOR

PRESSURE / TEMPERATURE RATINGS

Working Pressure	25 bar
Testing Pressure	Shell : 1.5 times Seat : 1.1 times
Working Temperature	-20°C to 110°C (EPDM Seat) -10°C to 80°C (NBR Seat)
Suitable Media	Water & Oil

MATERIALS

Part	Material	BS EN*
Body	Ductile Iron	1563 GJS-400
Disc	Ductile Iron Aluminium Bronze Stainless Steel 304 Stainless Steel 316	1563 GJS- 400-18 1982 CC491K 10283 GX5CrNi19-10 10283 GX5CrNiMo19-11-2
Sear Ring	EPDM NBR	
Shaft	Stainless Steel 410	10088-3 X17CrNi16-2
Taper Pins	Stainless Steel 304	10088-3 X5CrNiMo17-12-2
O-Ring	NBR	
Bushing	Resin	

* Indicates the corresponding equivalent standard material for BS EN.

DIMENSIONS

Unit: mm

Size	A	B	C	D	E	G
50	43	80	186	235	270	145
65	46	93	196	235	280	145
80	46	99	204	235	288	145
100	52	115	226	235	310	145
125	56	135	242	260	323	145
150	56	154	257	260	338	145
200	60	182	301	355	450	280
250	68	212	342	355	491	280
300	78	248	387	355	536	280
350	78	289	-	-	561	280

BFV-LB25
PN25

DN50~DN350

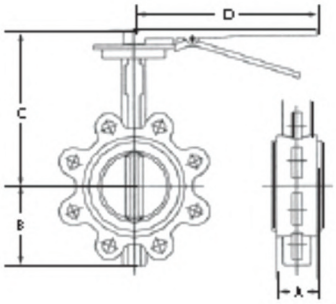

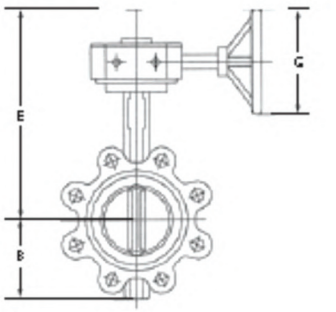

LUG TYPE BUTTERFLY VALVE

SPECIFICATION

FOR BS EN 1092-2 (BS4504) PN25 FLANGE MOUNTING
FACE-TO-FACE DIMENSION TO ISO 5752 / BS 5155 / BS EN 593
DOUBLE-STAGE WORM GEAR OPERATOR

PRESSURE / TEMPERATURE RATINGS

Working Pressure	25 bar
Testing Pressure	Shell : 1.5 times Seat : 1.1 times
Working Temperature	-20°C to 110°C (EPDM Seat) -10°C to 80°C (NBR Seat)
Suitable Media	Water & Oil

DIMENSIONS

Unit: mm

Size	L	A	D	E	F
400	102	328	680	260	280
450	114	358	724	260	280
500	127	393	759	260	280
600	154	445	888	300	385

Note:
1. Actuator mounting flange conforms to ISO 5211 drilling.
2. The butterfly valve can be supplied with electric actuator.
3. Micro switch / limit switch box are available upon request.
4. Others flange standard available upon request.
5. Design and specifications are subject to change without prior notice.

BFV-LB25
PN25

DN400~DN600

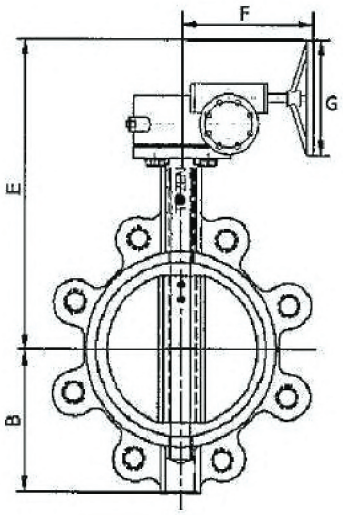

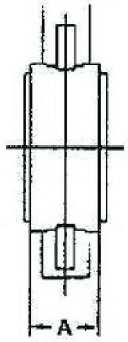

Y TYPE STRAINER

SPECIFICATION

FLANGED END DRILLED TO ANSI 150

PRESSURE / TEMPERATURE RATINGS

Working Pressure	16bar
Testing Pressure	1.5 times
Working Temperature	-10°C to 120°C
Suitable Media	Water & Oil

MATERIALS

Part	Material	ASTM
Body	Ductile Iron	A536 65-45-12
Cover	Ductile Iron	A536 65-45-12
Screen	Stainless Steel	AISI304
Blow-Off Plug	Stainless Steel	AISI304
Packing	EPDM	

STANDARD SCREENS

Size (mm)	Hole Dia (mm)
50-150	1.50
200-300	3.00

DIMENSIONS

Unit: mm

Size	L	H	Plug Size BSP
50	225	135	15
65	273	155	15
80	292	175	15
100	352	209	15
125	420	248	15
150	470	287	15
200	543	380	20
250	660	425	20
300	762	505	20

CYS-A

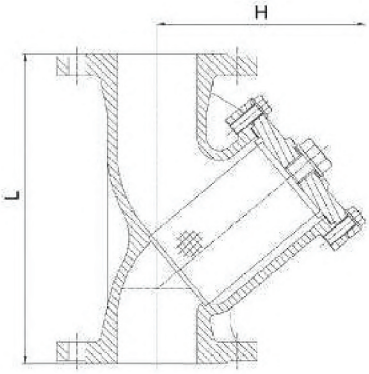

Note:
1. Design and specificatons are subject to change without prior notice.

DUCTILE IRON Y TYPE STRAINER

SPECIFICATION

FLANGED END DRILLED TO BS EN1092-2 PN25

PRESSURE / TEMPERATURE RATINGS

Working Pressure	25bar
Testing Pressure	1.5 times
Working Temperature	-10°C to 120°C
Suitable Media	Water & Oil

MATERIALS

Part	Material	ASTM
Body	Ductile Iron	A536 65-45-12
Cover	Ductile Iron	A536 65-45-12
Screen	Stainless Steel	AISI304
Blow-Off Plug	Carbon Steel	
Packing	EPDM	

STANDARD SCREENS

Size (mm)	Hole Dia (mm)
50-150	1.50
200-300	3.00

DIMENSIONS

Unit: mm

Size	L	H	Plug Size BSP
50	230	160	15
65	290	180	15
80	310	215	15
100	350	235	15
125	400	275	15
150	480	305	15
200	600	390	20
250	730	540	20
300	850	680	20

DYS-B25
PN25

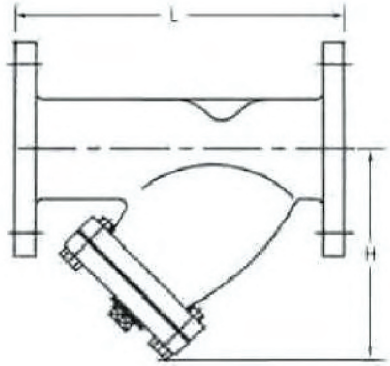

Note:
1. Design and specificatons are subject to change without prior notice.

WAFER TYPE DUAL DOOR CHECK VALVE

SPECIFICATION

SUITABLE PN10/PN16, JIS10K & ANSI150 FLANGE MOUNTING
FACE-TO-FACE DIMENSION TO EN 558-1 SR. 16

PRESSURE / TEMPERATURE RATINGS

Working Pressure	16 bar
Testing Pressure	Shell : 1.5 times Seat : 1.1 times
Working Temperature	-20°C to 110°C (EPDM Seat) -10°C to 80°C (NBR Seat)
Suitable Media	Water & Oil

MATERIALS

Part	Material	BS EN *
Body	Cast Iron Ductile Iron	1561 GJL-250 1563 GJS- 400-18
Disc	Ductile Iron Aluminium Bronze Stainless Steel 304 Stainless Steel 316	1563 GJS- 400-18 1982 CC491K 10283 GX5CrNi19-10 10283 GX5CrNiMo19-11-2
Sear Ring	EPDM NBR	
Shaft	Stainless Steel 316	10088-3 X5CrNiMo17-12-2
Spring	Stainless Steel 316	ISO 6931-1 X5CrNiMo17-12-2
Bush	Resin	

* Indicates the corresponding equivalent standard material for ASTM.

DIMENSIONS

Unit: mm

Size	L	A	B
50	43	65	101
65	46	80	121
80	64	94	131
100	64	117	156
125	70	145	187
150	76	170	217
200	89	224	267
250	114	265	328
300	114	310	375
350	127	360	420
400	140	410	483
450	152	450	538
500	152	505	593
600	178	624	697

Note:
1. Design and specifications are subject to change without prior notice.

CDCV-W
DDCV-W
PN16

DN50~DN600

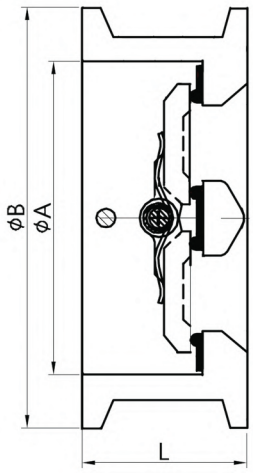

WAFER TYPE DUAL DOOR CHECK VALVE

SPECIFICATION

SUITABLE PN25 FLANGE MOUNTING
FACE-TO-FACE DIMENSION TO EN 558-1 SR. 16

PRESSURE / TEMPERATURE RATINGS

Working Pressure	25 bar
Testing Pressure	Shell : 1.5 times Seat : 1.1 times
Working Temperature	-10°C to 120°C (EPDM Seat) -10°C to 80°C (NBR Seat)
Suitable Media	Water & Oil

MATERIALS

Part	Material	BS EN *
Body	Ductile Iron	1563 GJS-500-7
Disc	Ductile Iron Aluminium Bronze Stainless Steel 304 Stainless Steel 316	1553 GJS-500-7 1982 CC491K 10283 GX5CrNi19-10 10283 GX5CrNiMo19-11-2
Sear Ring	EPDM NBR	
Shaft	Stainless Steel 316	10088-3 X5CrN Mo17-12-2
Spring	Stainless Steel 316	ISO 6931-1 X5CrNiMo17-12-2
Bush	Resin	

* Indicates the corresponding equivalent standard material for BS EN.

DIMENSIONS

Unit: mm

Size	L	A	B
50	43	65	107
65	46	80	127
80	64	94	142
100	64	117	168
125	70	145	194
150	76	170	224
200	89	224	284
250	114	265	343
300	114	310	400

Note:
1. Design and specifications are subject to change without prior notice.

DDCV-WB25

PN25

DN50~DN300

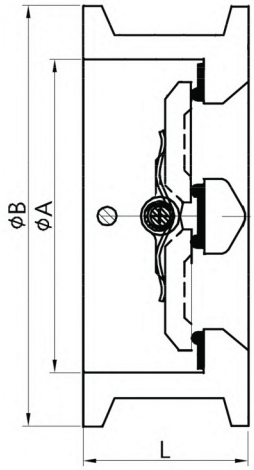

DUCTILE IRON SILENT CHECK VALVE (WAFER TYPE)

SPECIFICATION

FOR ANSI 150 FLANGE MOUNTING

PRESSURE / TEMPERATURE RATINGS

Working Pressure	16bar
Testing Pressure	Shell : 1.5 times Seat : 1.1 times
Working Temperature	-20°C to 110°C EPDM -10°C to 80°C NBR
Suitable Media	Water,Oil

MATERIALS SPECIFICATION

Part	Material	ASTM SPEC
Body	Ductile Iron	A536 65-45-12
Disc	Stainless Steel	A351 CF8
	Bronze	B62 C83600
Seat	Stainless Steel	A351 CF8
	Bronze	B62 C83600
Seat Ring	EPDM / NBR	Commercial
Bushing	Bronze	B62 C83600
Spring	Stainless Steel	AISI 304

DIMENSIONS

Size mm	D mm	H mm
50	110	67
65	136	73
80	152	80
100	178	102
125	221	118
150	248	140
200	340	165
250	404	210
300	415	286
350	484	350

DSCV-WA

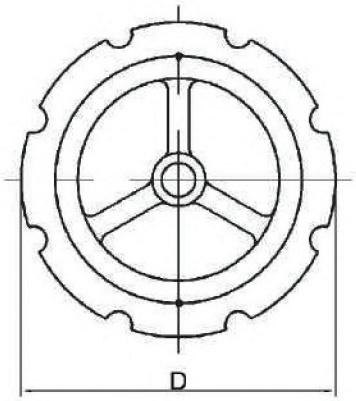

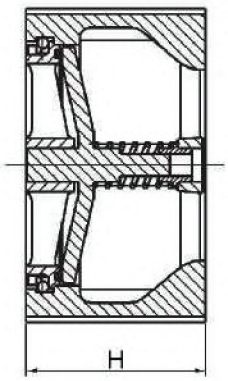

Note:
1. Design and specificatons are subject to change without prior notice.

DUCTILE IRON SILENT CHECK VALVE (WAFER TYPE)

SPECIFICATION

FOR EN1092-2 PN25 FLANGE MOUNTING

PRESSURE / TEMPERATURE RATINGS

Working Pressure	25bar
Testing Pressure	Shell : 1.5 times Seat : 1.1 times
Working Temperature	-20°C to 110°C -10°C to 80°C
Suitable Media	Water,Oil

MATERIALS SPECIFICATION

Part	Material	ASTM SPEC
Body	Ductile Iron	A536 65-45-12
Disc	Stainless Steel	A351 CF8
	Bronze	B62 C83600
Seat	Stainless Steel	A351 CF8
	Bronze	B62 C83600
Seat Ring	EPDM / NBR	Commercial
Bushing	Bronze	B62 C83600
Spring	Stainless Steel	AISI 304

DIMENSIONS

Size mm	D mm	H mm
50	110	67
65	136	73
80	152	80
100	178	102
125	221	118
150	248	140
200	340	165
250	404	210
300	415	286
350	484	350

DSCV-WA
PN25

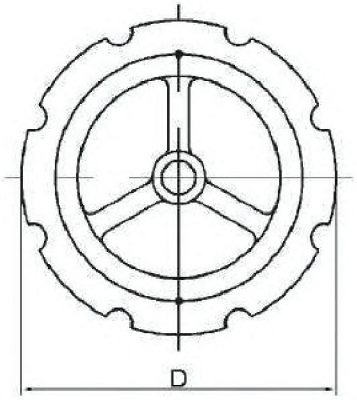

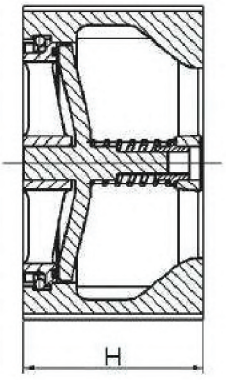

Note:
1. Design and specificatons are subject to change without prior notice.

SILENT CHECK VALVE

SPECIFICATION

FOR ANSI 150 FLANGE MOUNTING

PRESSURE / TEMPERATURE RATINGS

Working Pressure	16bar
Testing Pressure	Shell : 1.5 times Seat : 1.1 times
Working Temperature	-20°C to 110°C -10°C to 80°C
Suitable Media	Water,Oil

MATERIALS SPECIFICATION

Part	Material	ASTM Spec
Body	Cast Iron	A126 Class B
	Ductile Iron	A536 65-45-12
Disc	Ductile Iron	A535 65-45-12
	Stainless Steel	A351 CF8
	Bronze	B62 C83600
Seat	Stainless Steel	A351 CF8
	Bronze	B62 C83600
Seat Ring	EPDM / NBR	Commercial
Bushing	Bronze	B62 C83600
Spring	Stainless Steel	AISI 304

DIMENSIONS

Unit: mm

Size	L	Size	L
50	133	250	393
65	140	300	362
80	152	350	400
100	185	400	448
125	216	450	376 476
150	229	500	524
200	257	600	610

Note:
1. Design and specificatons are subject to change without prior notice.

GSCV-F

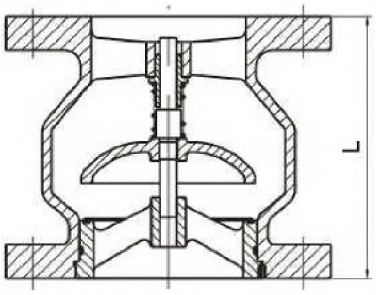

SILENT CHECK VALVE

SPECIFICATION

FOR EN1092-2 PN25 FLANGE MOUNTING

PRESSURE / TEMPERATURE RATINGS

Working Pressure	25bar
Testing Pressure	Shell : 1.5 times Seat : 1.1 times
Working Temperature	-20°C to 110°C -10°C to 80°C
Suitable Media	Water,Oil

MATERIALS SPECIFICATION

Part	Material	ASTM Spec
Body	Cast Iron	A126 Class B
	Ductile Iron	A536 65-45-12
Disc	Ductile Iron	A535 65-45-12
	Stainless Steel	A351 CF8
	Bronze	B62 C83600
Seat	Stainless Steel	A351 CF8
	Bronze	B62 C83600
Seat Ring	EPDM / NBR	Commercial
Bushing	Bronze	B62 C83600
Spring	Stainless Steel	AISI 304

DIMENSIONS

Unit: mm

Size	L	Size	L
50	133	250	393
65	140	300	362
80	152	350	400
100	185	400	448
125	216	450	376 476
150	229	500	524
200	257	600	610

GSCV-F
PN25

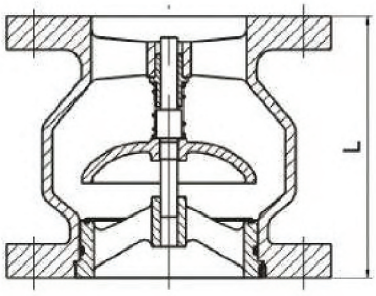

Note:
1. Design and specificatons are subject to change without prior notice.

SWING CHECK VALVE

SPECIFICATION

FACE TO FACE DIMENSION CONFORMS TO ANSI B16.10
FLANGED END DRILLED TO ANSI B16.1

PRESSURE / TEMPERATURE RATINGS

Working Pressure	240 psi
Testing Pressure	Shell: 1.5 times Seat: 1.1 times
Working Temperature	-10ºC to 120ºC
Suitable Media	Water & Oil

MATERIALS

Part	Material	ASTM
Body	Ductile Iron	A536 65-45-12
Disc	Ductile Iron	A536 65-45-12
Cover	Ductile Iron	A536 65-45-12
Seat Ring	Brass	B16 C36000
Disc Ring	Brass	B16 C36000

DIMENSIONS

Unit: inch

Size	L	H
2	8.0	5.0
2½	8.5	5.9
3	9.5	6.5
4	11.5	7.0
5	13.0	8.1
6	14.0	8.7
8	19.5	9.8
10	24.5	12.0
12	27.5	15.9

Note:
1. Design and specifications are subject to change without prior notice.

CCV-A

CLASS 125

2" ~ 12"

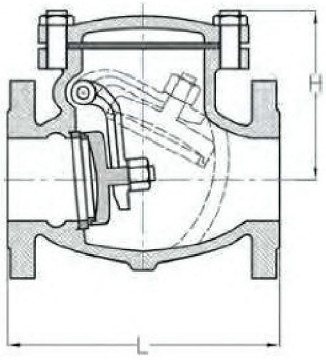

RISING STEM GATE VALVE

SPECIFICATION

RISING STEM, OUTSIDE SCREW AND YOKE
FACE TO FACE DIMENSION CONFORMS TO ANSI B16.10
FLANGED END DRILLED TO ANSI B16.1

PRESSURE / TEMPERATURE RATINGS

Working Pressure	240 psi
Testing Pressure	Shell: 1.5 times Seat: 1.1 times
Working Temperature	-10ºC to 150ºC
Suitable Media	Water & Oil

MATERIALS

Part	Material	ASTM
Body	Ductile Iron	A536 65-45-12
Bonnet	Ductile Iron	A536 65-45-12
Disc	Ductile Iron	A536 65-45-12
Seat	Brass	B16 C63000
Stem	Stainless Steel 420	AISI 420
Packing	Graphite	Non-Asbestos
Handwheel	Ductile Iron	A536 65-45-12

DIMENSIONS

Unit: inch

Size	L	H	D
1½	6.5	12.0	6.3
2	7.0	12.8	6.3
2½	7.5	14.4	6.3
3	8.0	17.4	7.9
4	9.0	20.2	7.9
5	10.0	23.7	9.8
6	10.5	28.3	9.8
8	11.5	36.3	11.8
10	13.0	43.9	13.8
12	14.0	53.0	13.8
14	15.0	61.4	18.7
16	16.0	68.5	18.7

Note:
1. Design and specifications are subject to change without prior notice.

R-CGV-A

Class 125

1½"~16"

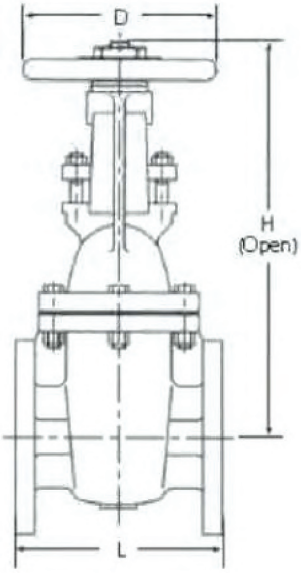

DUCTILE IRON RISING STEM GATE VALVE

SPECIFICATION

RISING STEM • FACE TO FACE DIMENSION TO BS5163
FLANGE END DRILLED TO BS4504

PRESSURE / TEMPERATURE RATINGS

Working Pressure	25 bar
Testing Pressure	Shell : 37.5 bar Seat : 27.5 bar
Working Temperature	-15°C to 150°C
Suitable Media	water, oil & steam

MATERIALS

Part	Material	BS
Body	Ductile Iron	1563 GJS-450-10
Bonnet	Ductile Iron	1563 GJS-450-10
Disc	Ductile Iron	1563 GJS-450-10
Seat Ring	Cast Brass	CW612N
Stem	Stainless Steel(SS410)	10088-3x12 Cr13
Packing	Graphite	-
Handwheel	Ductile Iron	1563 GJS-450-10

DIMENSIONS

Size mm	L mm	H (open) mm	D mm
50	178	330	180
65	190	350	180
80	203	440	200
100	230	520	200
125	254	625	250
150	267	703	250
200	292	952	300
250	330	1150	350
300	356	1214	350

Note:

1. Other flange standards available upon request.
2. If used for gas application. please consult our sales office.
3. Design and specification are subject to change without prior notice.

R-CGV-B25

PN25

DN50~DN300

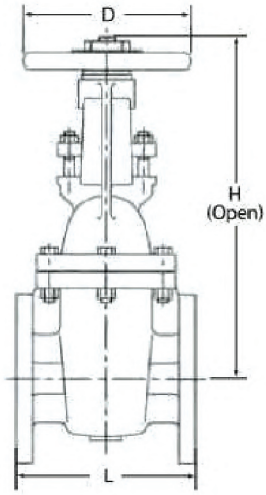

IRON GATE VALVE

SPECIFICATION

NON-RISING STEM, INSIDE SCREW
DIN 3352 DESIGN, FLANGED TO DIN 2532/2533 PN10/16
FACE-TO-FACE DIMENSION CONFORMS TO DIN3202 F4 SERIES

PRESSURE / TEMPERATURE RATINGS

Working Pressure	16 bar
Testing Pressure	Shell: 24 bar Seat: 17.6 bar
Working Temperature	-10°C to 80°C
Suitable Media	Water & Oil

MATERIALS

Part	Material	DIN
Body	Cast Iron (DN50~DN125) Ductile Iron (DN50~DN300)	1691 GG25 1693 GGG50
Bonnet	Cast Iron (DN50~DN125) Ductile Iron (DN50~DN300)	1691 GG25 1693 GGG50
Disc	Cast Iron (DN50~DN125) Ductile Iron (DN50~DN300)	1691 GG25 1693 GGG50
Seat Ring	Brass	17660 CuZn39Pb3
Stem	Stainless Steel	17440x20Cr13
Packing	Graphite	Non-Asbestos
Handwheel	Ductile Iron	1693 GGG50

DIMENSIONS

Unit: mm

Size	L	H	D
50	150	254	150
65	170	273	150
80	180	330	210
100	190	375	210
125	200	423	250
150	210	494	250
200	230	550	300
250	250	652	320
300	270	772	350

Note:
1. JIS10K, ANSI150# or PN10 flange standard are available upon request.
2. Design and specifications are subject to change without prior notice.

IGV-D

PN16

DN50~DN300

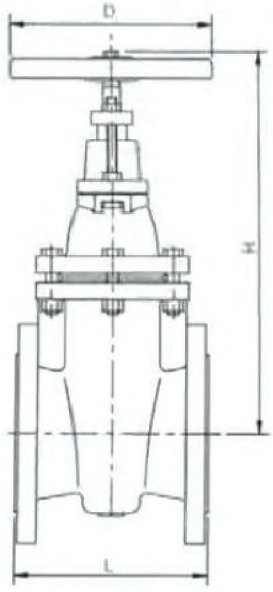

CAST IRON GLOBE VALVE

SPECIFICATION

RISING STEM • OUTSIDE SCREW AND YOKE
MSS SP-85 • FLANGED TO ANSI CLASS 125

PRESSURE / TEMPERATURE RATINGS

Working Pressure	200 psi
Testing Pressure	Shell : 350 psi Seat : 220 psi
Working Temperature	14˚F to 248˚F
Suitable Media	Water, Oil & Gas

MATERIALS

Part	Material	ASTM
Body	Cast Iron	A126 Class B
Bonnet	Cast Iron	A126 Class B
Disc	Gunmetal	B62 83600
Seat Ring	Gunmetal	B62 83600
Stem	Brass Stainless Steel	B16 C36000 AISI 420
Packing	Graphite	Non-Asbestos
Handwheel	Cast Iron	A126 Class B

DIMENSIONS

Size inch	L inch	H (Open) inch	D inch
2	8	3.2	7
2-1/2	8.5	12.9	7
3	9.5	13.5	8
4	11.5	15.2	10
5	13	16.6	12
6	14	20	12
8	19.5	22.8	13.7
10	24.5	26.9	16
12	27.5	33.6	18

Note:
1. JIS B2239 10K and other flange standards available upon request.
2. If used for gas application, please consult our sales office.
3. Design and specifications are subject to change without prior notice.

CGLV-A

Class 125
2"~12"

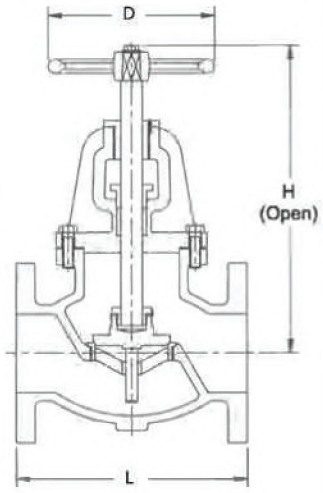

AUTOMATIC AIR VENT

SPECIFICATION

THREADED TO BS 21 (ISO 7)

PRESSURE / TEMPRATURE

Model	CAAV-B	DAAV-B25
Working Pressure	16 bar	25 bar
Test Pressure	24 bar	37.5 bar
Working Temperature	-10°C to 120°C	
Suitable Media	Water	

Note: Minimum working pressure: 2bar

MATERIALS

Part	Material	BS EN *
Body	Ductile iron	1563-GJS-450-10
Cover	Ductile iron	1563-GJS-450-10
Seat	Brass	12164 CW603N
Float	Stainless steel	10088-2 X5CrNi18-10
Float arm	Stainless steel	10088-2 X5CrNi18-10
Gasket	EPDM	-
Disc	Silicon rubber	-

*: Indicates the corresponding equivalent standard materila for BS EN.

CAAV-B
PN16
DAAV-B25
PN25

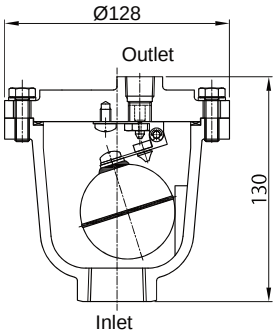

DIMENSIONS

Size	Inlet	Outlet	Orifice mm
15A	PT 1/2	PT 3/8	1.6
20A	PT 3/4	PT 3/8	
25A	PT 1	PT 3/8	

STRUCTURE

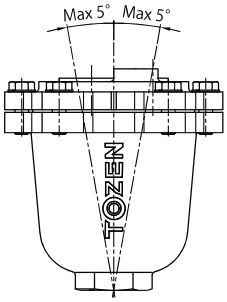

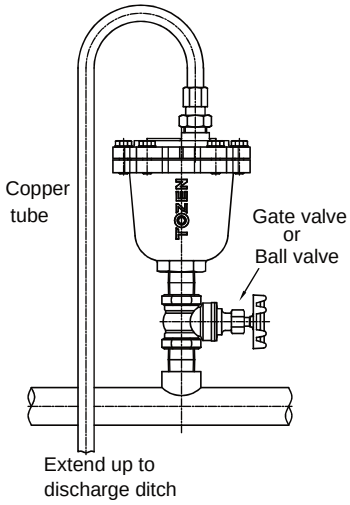

Installation guide:
1. Air vent shall be installed vertically with allowance of within 5°from the horizontal pipe line.
2. Install a gate valve or ball valve at the inlet for maintenance purposes.
3. A copper tube to be connected from the outlet of the air vent up to drainage ditch, to prevent any leakage of the water, if any.
4. Insulate the air vent and gate valve / ball valve to prevent condensation.

Note: Design and specifications are subject to change without prior notice.

PRESSURE REDUCING VALVE

M-PRV-S

PN-16

DN20～DN50

FEATURE

- Even if there is a pressure fluctuation on the inlet side. stable decompression operation can be obtained with almost no effect on the set pressure.
-Since the secondary pressure directly operates the valve body. hunting hardly occurs. the internal structure is simple. and there are almost no troubles.

SPECIFICATION

MODEL		M-PRV-S
Sizes (mm)		20～50
Application Fluid		Water, Warm Water
Fluid Temperature		5～60℃
Applicable Inlet Pressure		Under 1.6MPa
Max. Pressure Reduction Ratio		10 : 1
Connection		PT
Material	Body	SCS13A
	Main Part	Bonnet etc. : SCS13A. Diaphragm. Ring : NBR

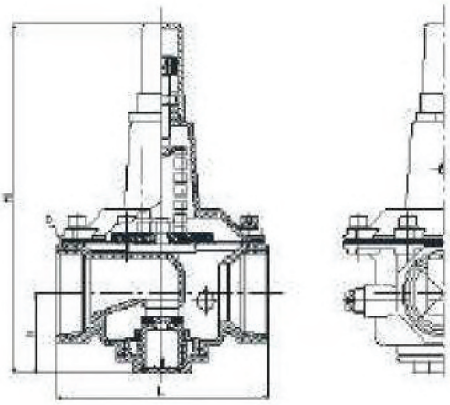

DIMENSIONS

Unit: mm

Nominal size	D	L	H	h
20	Rc3/4	96	175.5	42.5
25	Rc1	103	182	43
32	Rc1-1/4	111	191	45.5
40	Rc1-1/2	123	193	44.5
50	Rc2	170	219	63.5

PRESSURE REDUCING VALVE FOR LARGE CAPACITY

TOZEN PRV-CPR is a pilot-controlled hydraulic-operated pressure reducing valve suitable for various applications. TOZEN PRV-CPR valves reduce and maintain a lower constant downstream pressure disregard a higher and fluctuating upstream.

PRV-CPR
PN-16
DN65～DN150

SPECIFICATION

MODEL		PRV-CPR
Sizes (mm)		65～150
Application Fluid		Water, Warm Water
Fluid Temperature		5～60℃
Applicable Inlet Pressure		Under 1.6MPa
Max. Pressure Reduction Ratio		10 : 1
Flange Connection		ISO7005/EN1092/ BS4504-PN16 RF
Material	Body	FCD450
	Seat	SCS13A
	Diaphragm, Shield Ring	NBR

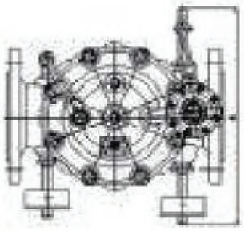

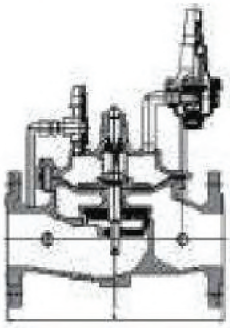

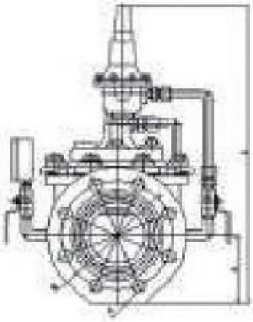

DIMENSIONS

Unit: mm

Nominal size	L	H	h	W	C	S	weight (kg)
65	290	-432	92.5	-335	145	4-φ19	20.5
80	310	-442	100	-344	160	8-φ19	24
100	350	-476	110	-355	180	8-φ19	32.5
125	400	-511	125	-390	210	8-φ19	45
150	480	-586	145	-430	240	8-φ22	60.5

TOZEN
A joint reliance

GDRV-101

FIXED ORIFICE
DOUBLE REGULATING VALVE

PRODUCT DATA SHEET

FIXED ORIFICE DOUBLE REGULATING VALVE

Model : GDRV-101

15mm (½") ~ 50mm (2")

APPLICATION

Tozen Double Regulating Valves are installed and used in centralised heating and cooling systems to obtain design flow rates of each terminal units and balancing the circuits in the building.

FUNCTION

- Balancing
- Measuring
- Pre-setting
- Isolating

FEATURES

- Y-pattern globe design.
- Integral fixed orifice plate to form a fixed orifice flow measurement unit with regulation and isolation function.
- Accuracy of +/-5% at full open position of the valve.
- Equipped with 2 measuring nipples for differential pressure measurement.
- Microset handwheel adjustment with easily readable settings.
- Multi-turn adjustment range for maximum flow control.
- Double regulating feature allows valve opening to be set with allen key.
- Long neck for thermal insulation.
- Bronze body of PN25 pressure rating.
- Comply to BS 7350.

SPECIFICATION

• Type	:	Fixed orifice
• Size range	:	15mm ~ 50mm
• Max. working pressure	:	25bar
• Testing pressure	:	37.5bar (Shell)
	:	27.5bar (Seat)
• Working temperature	:	-10˚C to 120˚C
• Connection	:	BS 21 (ISO 7)
	:	ANSI B1.20.1
• Standard	:	Comply to BS 7350

MATERIALS

Part	Material	ASTM	EN
Body	Bronze	B62 B83600	EN1982 CC491K
Bonnet	DZR Brass	B453 C35330	EN12164 CW602N
Stem	DZR Brass	B453 C35330	EN12164 CW602N
Disc (15mm ~ 20mm)	DZR Brass	B453 C35330	EN12164 CW602N
Disc (25mm ~ 50mm)	DZR Brass + PTFE	B453 C35330	EN12164 CW602N
Orifice Insert	DZR Brass	B453 C35330	EN12164 CW602N
Measuring Nipples	DZR Brass	B453 C35330	EN12164 CW602N
O-Ring	EPDM	-	-
Handwheel	ABS	-	-

DIMENSIONS & COEFFICIENTS

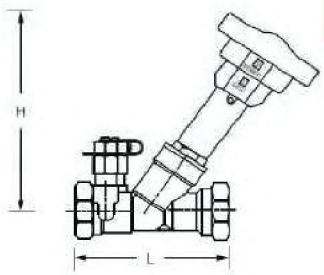

Size (mm)	L (mm)	H (mm)	Weight (kg)	Kvs
15	90	109	0.6	2.1
20	98	110	0.6	4.4
25	105	125	0.8	9.1
32	120	128	1.1	17.5
40	130	145	1.4	26.3
50	150	148	2.0	49.3

Note: Kvs at fully open position.

Installation

- The Double Regulating Valve shall be installed with the arrow marking on the valve body in accord to the same flow direction in the pipe. It may be installed at any angle.
- Use adequate seal material to protect the thread on pipe side from leaking or rusting. For connection, use proper tool (spanner, etc) to screw correctly in accordance to thread standard. Do not connect by using wrench on valve side.
- Up and down stream from the valve is required to avoid turbulence which will affect the accuracy.

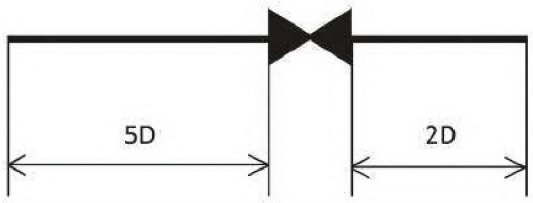

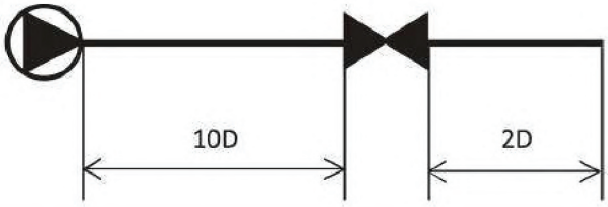

FLOW MEASUREMENT GRAPHS

GDRV-101
Diameter : 15mm

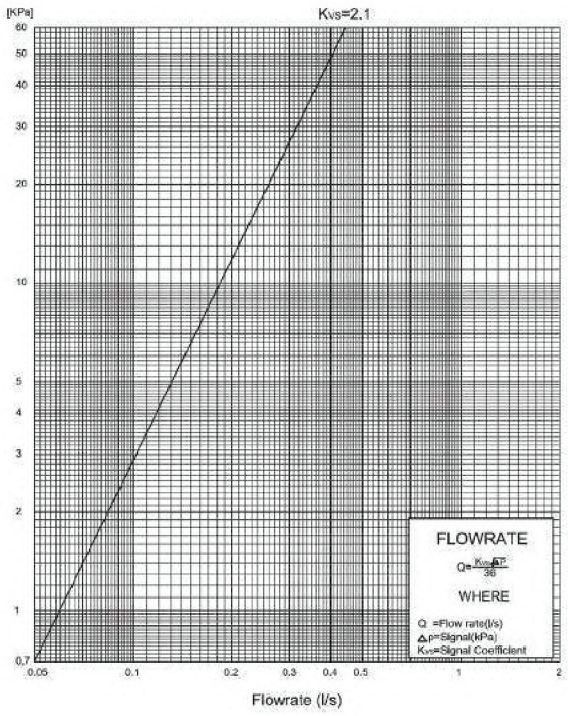

GDRV-101
Diameter : 20mm

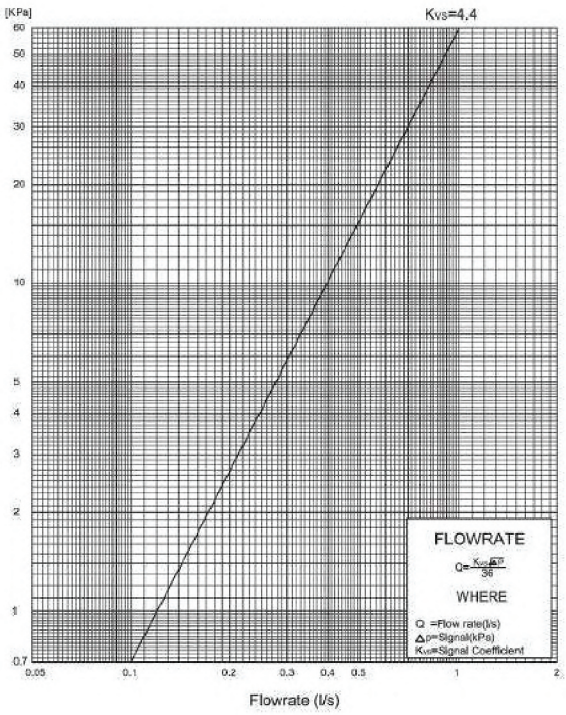

GDRV-101
Diameter : 25mm

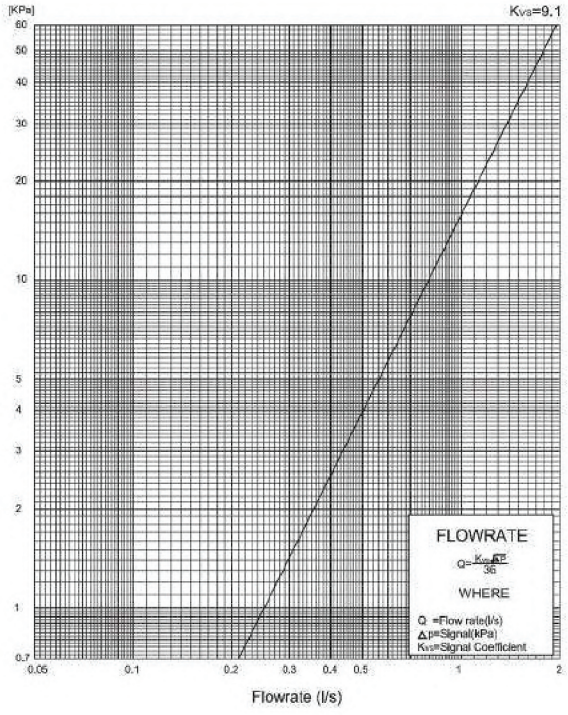

GDRV-101
Diameter : 32mm

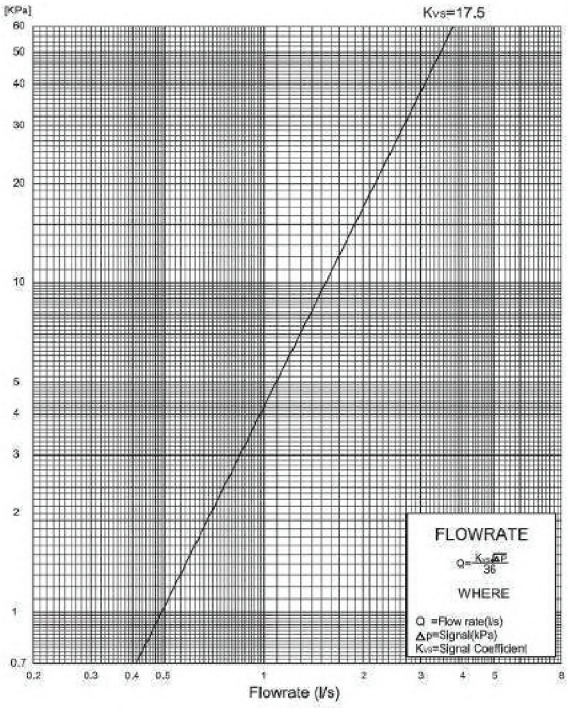

FLOW MEASUREMENT GRAPHS

GDRV-101
Diameter : 40mm

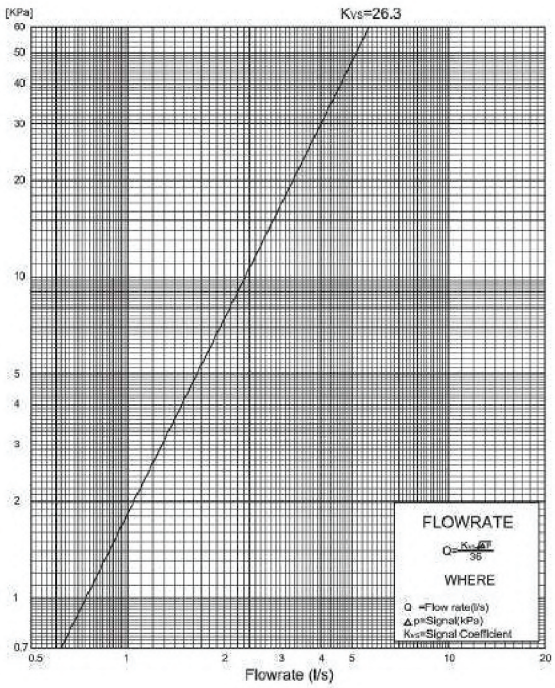

GDRV-101
Diameter : 50mm

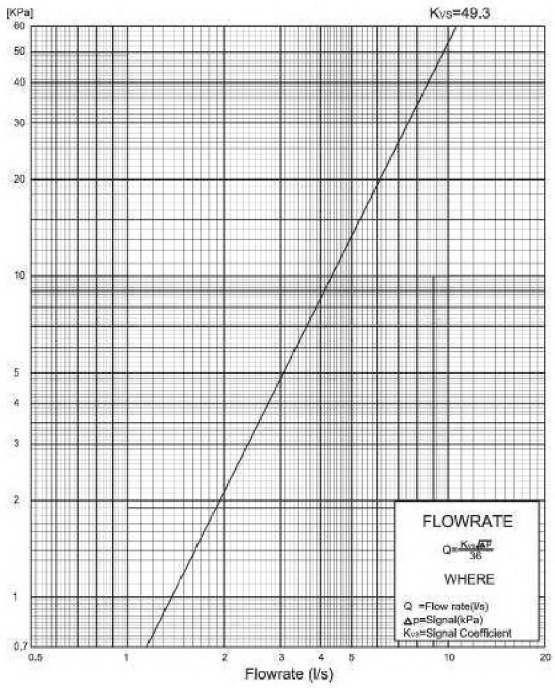

TOZEN
A joint reliance

DDRV-B
DDRV-B25

FIXED ORIFICE
DOUBLE REGULATING VALVE

PRODUCT DATA SHEET

FIXED ORIFICE DOUBLE REGULATING VALVE

Model : DDRV-B
DDRV-B25

65mm (2½") ~ 300mm (2")

APPLICATION

Tozen Double Regulating Valves are installed and used in centralised heating and cooling systems to obtain design flow rates of each terminal units and balancing the circuits in the building.

FUNCTION

- Balancing
- Measuring
- Pre-setting
- Isolating

FEATURES

- Y-pattern globe design.
- Integral fixed orifice plate to form a fixed orifice flow measurement unit with regulation and isolation function.
- Accuracy of +/-5% at full open position of the valve.
- Equipped with 2 measuring nipples for differential pressure measurement.
- Microset handwheel adjustment with easily readable settings.
- Multi-turn adjustment range for maximum flow control.
- Double regulating feature allows valve opening to be set with allen key.
- Long neck for thermal insulation.
- Ductile iron body of PN16 & PN25 pressure rating.
- Comply to BS 7350.

SPECIFICATION

- Type : Fixed orifice
- Size range : 65mm ~ 300mm
- Max. working pressure : 16bar (DDRV-B)
  : 25bar (DDRV-B25)
- Testing pressure (Shell) : 24bar (DDRV-B)
  : 37.5bar (DDRV-B25)
- Testing pressure (Seat) : 17.6bar (DDRV-B)
  : 27.5bar (DDRV-B25)
- Working temperature : -10ºC to 120ºC
- Connection : ANSI150
  (Other flange standard available upon request)
- Standard : Comply to BS 7350

MATERIALS

Part	Material	ASTM	EN
Body	Ductile Iron	A536 65-45-12	EN-JS 1050
Bonnet	Ductile Iron	A536 65-45-12	EN-JS 1050
Stem	Stainless Steel 410	S41000	BS970 410S21
Disc	EPDM Coated Ductile Iron	A536 65-45-12	EN-JS 1050
Gland (65 - 150mm)	DZR Brass	B453 C35330	EN 12164 CW602N
Gland (200 - 300mm)	Ductile Iron	A536 65-45-12	EN-JS 1050
Gland Nut	DZR Brass	B453 C35330	EN 12164 CW602N
Measuring Nipples	DZR Brass	B453 C35330	EN 12164 CW602N
Handwheel	Ductile Iron	A536 65-45-12	EN-JS 1050
Orifice Insert	DZR Brass	B453 C35330	EN 12164 CW602N
Packing	EPDM	-	-

DIMENSIONS & COEFFICIENTS

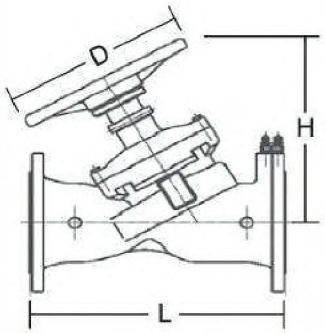

Size (mm)	L (mm)	H (mm)	D (mm)	Weight (kg)	Kvs
65	290	265	200	17	98.40
80	310	270	200	20	131.24
100	350	310	240	29	189.33
125	400	340	290	40	354.73
150	480	340	290	52	472.39
200	600	537	350	113	735.55
250	730	570	420	185	1153.21
300	850	690	420	248	1712.62

Note: Kvs at fully open position.

Installation

- The Double Regulating Valve shall be installed with the arrow marking on the valve body in accord to the same flow direction in the pipe. It may be installed at any angle.
- The gasket must be assembled between the flanges when the valve is installed. It can ensure that the valve is concentric with the pipe and the exact measurement data can be read.
- Avoid welding with pipe while it is connected. Tighten flanges bolts alternately, diagonally and repeatedly with the same force.
- Up and down stream from the valve is required to avoid turbulence which will affect the accuracy.

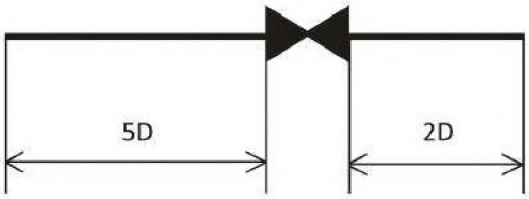

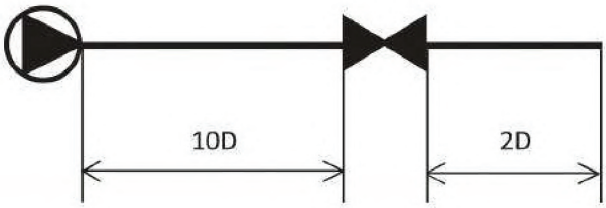

FLOW MEASUREMENT GRAPHS

DDRV-B / DDRV-B25
Diameter : 65mm

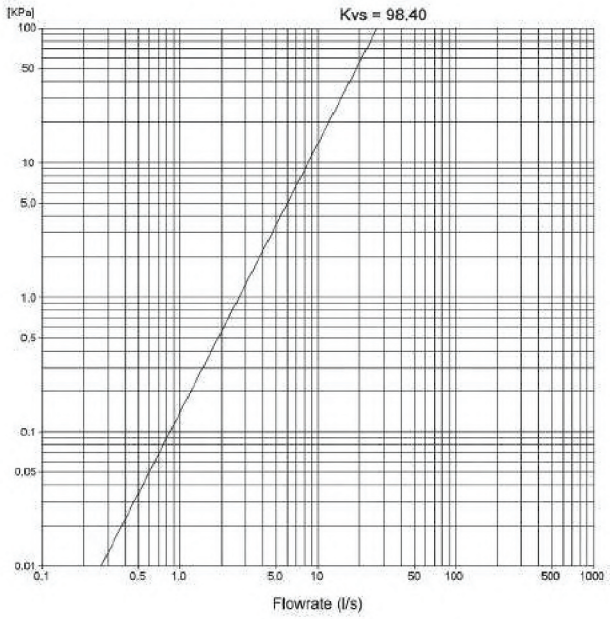

DDRV-B / DDRV-B25
Diameter : 80mm

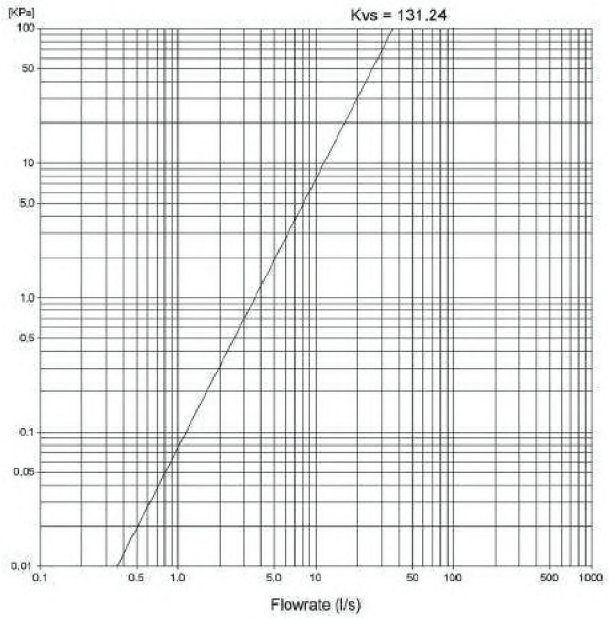

DDRV-B / DDRV-B25
Diameter : 100mm

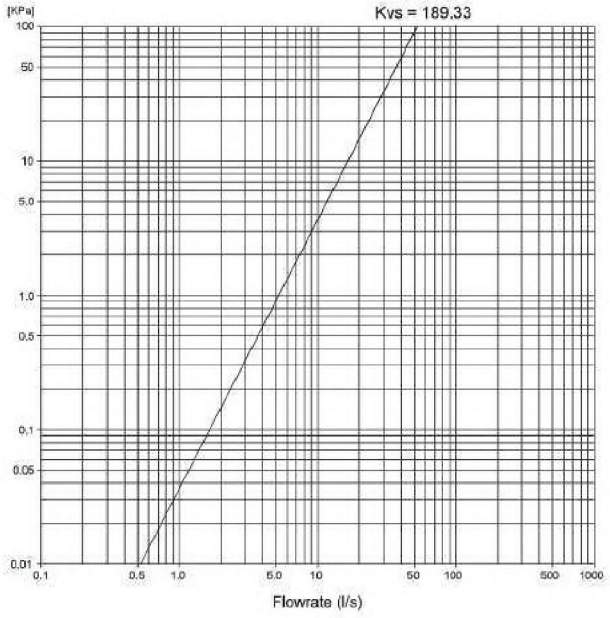

DDRV-B / DDRV-B25
Diameter : 125mm

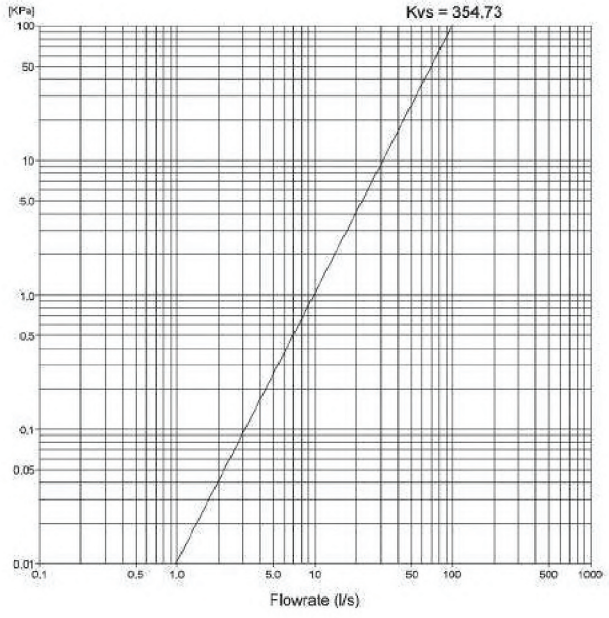

FLOW MEASUREMENT GRAPHS

DDRV-B / DDRV-B25
Diameter : 150mm

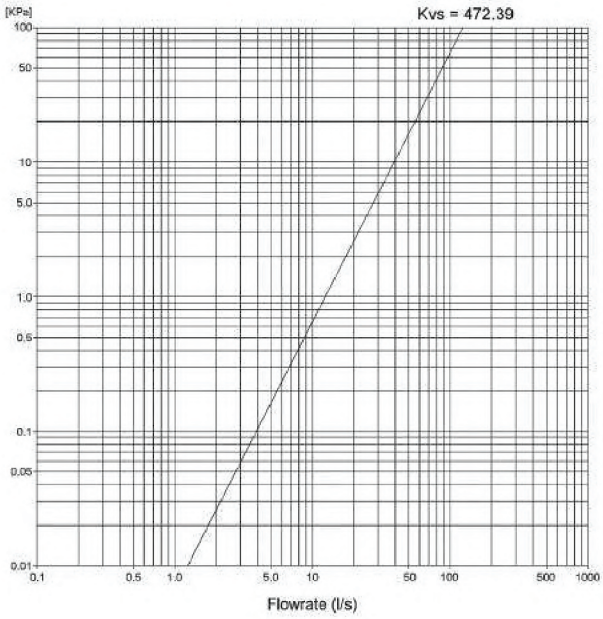

DDRV-B / DDRV-B25
Diameter : 200mm

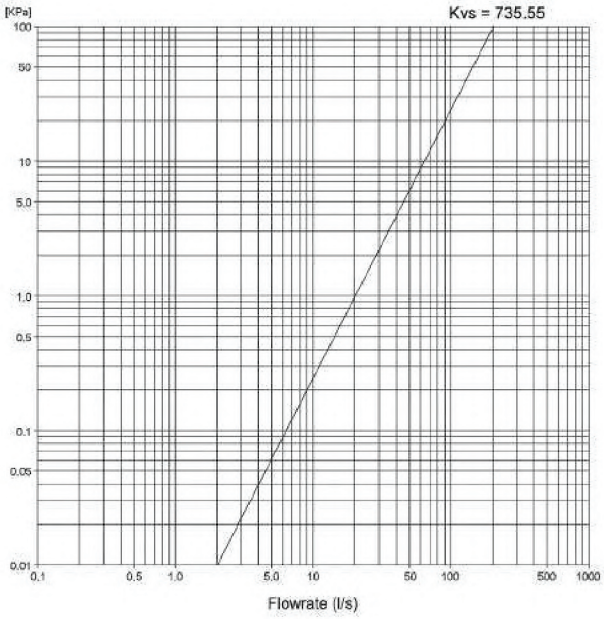

DDRV-B / DDRV-B25
Diameter : 250mm

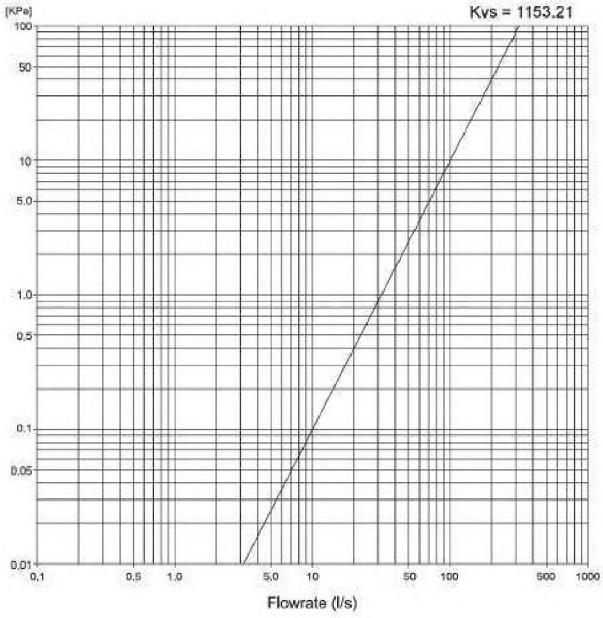

DDRV-B / DDRV-B25
Diameter : 300mm

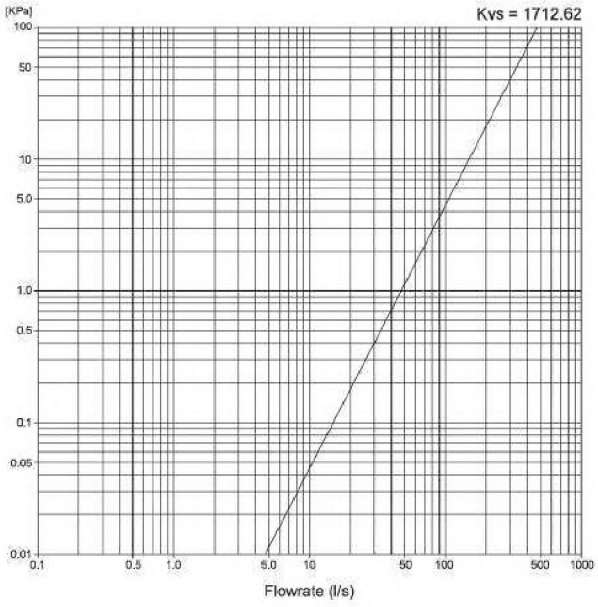

TOZEN
A joint reliance

ELECTRONIC MANOMETER

TOCA6

The TOZEN TOCA6 electronic manometer Unit has been developed in response to demand from discerning commissioning engineers requiring an improvement in measuring techniques for differential pressures measurements primarily on balancing valves in heating and air conditioning systems.
The nine button design allows simple navigation of the easy-to follow menu system with all parameters visible on screen.

TECHNICAL SPECIFICATION

Measurement accuracy Differential Pressure

Range 0.3-1kPa — Accuracy ±0.03kPa
Range 1-10kPa — Accuracy ±0.05kPa
Range 10-250kPa – Accuracy ±0.5% reading
Hystersis 0.2% span

Static Pressure

10 Bar Maximum with hoses supplied as standard
High pressure options available

Measurement Range

0.1kPa to 250kPa

Effective operating time

20 hour with standard Alkaline PP3 battery

Structure

DESCRIPTION

TOZEN TOCA6 Manometer unit comprise the following
Hand held transducer and display unit in rubber protection sleeve.
Quick connect tubing set complete with manually operated isolation valves.
Quick connect angle pattern 3.3mm insertion probes units.

Toolkit
Instruction manual
Quick start instruction set and menu map, which has been set up with default valves for all the editable function and are listed.

FUNCTIONS

Flow/Pressure Display: Shows valve type, Kvs value, handwheel setting (when use with variable orifice), differential pressure, flow, valve type, valve size. Flow and pressure are shown in large text format.

Multi Display: Shows valve type, Kvs value, handwheel setting (when use with variable orifice), design flow, target flow, differential pressure, flow, valve type, valve size.
Pressure Display: Large text differential pressure.
Predictive Handwheel Position: For adjusting variable orifice valves.

Valve Storage: Up to 100 storage locations are available for manually storing valve information on-site.

Units

Differential Pressure: Pa, kPa, PSI, BAR, feet H_2O, Inches H_2O, mtrs H_2O, mm H_2O, cm H_2O

Flow : l/s, l/M, l/h, USGPM, UKGPM

Edit Functions
Design flow, target flow, specific gravity, Kvs, valve maker, valve group, valve model, valve size, handwheel position.

TOZEN
A joint reliance

NEUMAX®

QT SERIES QUARTER TURN ELECTRIC ACTUATOR

"NEUMAX" QT Series Quarter Turn Electric Actuator

'QT' series electric actuators are designed & engineered for robust, reliable and for high performance duty onto quarter turn valves. The unique reliable motor module, adjustable cam plate limit switch, self locking mechanism, precision gearing system and ball bearings, the auto declutching mechanism, light force load on the hand-wheel, the adaptor drive bushing and bottom ISO 5211 mounting dimension, are added advantages against others in the field of valve automation. CE approved. FM & UL pending.

Features

1. ENCLOSURE
   Standard enclosure to water jet proof & water tight proof IP 67, NEMA 4 & 6.
2. MOTOR
   Squirrel cage motor is of encapsulated type, on high stall torque and low inherent force for seating & unseating of valves. All motors are integrated with build-in thermal protection.
3. TERMINAL CONNECTION & WIRING
   Terminal connections are of "WAGO" push on type, making wiring connection very easy & without fuss. Electrical wiring circuit is standardized for single & three phase voltage. Addition termination is available on request.
4. INTERNAL COMPONENTS ARRANGEMENT
   Internal mechanical and electrical components are designed in modular mounting arrangement, and can be easily removed for maintenance purposes. Addition optional accessories are also possible.
5. LIMIT SWITCHES
   A pair of limit switches are activated by means of simple, reliable & adjustable cam plates, mounted directly onto, and driven by center column. The unique cam plate design does not allow over travel of limit switches.
6. TORQUE SWITCHES
   Electric actuators on 100 Nm and above, are installed with torque switches for over-load protection.
7. HEATER
   For prevention of condensation due to weather & temperature changes, and also keeps internal components clean & dry, a 20 watt space heater is provided inside all the electric actuators.
8. SELF LOCKING MECHANISM
   Because of the worm gear design system, all the electric actuators are self locking.
9. HANDWHEEL
   Correct size of hand-wheel on the electric actuator ensure adequate strength for safe and efficient emergency operation.
10. MANUAL OVER-RIDE
    Engage by pulling the lever & turning the hand-wheel. Lever is auto declutch when power supply is switched on, and hand-wheel does not turn as extra safety feature.
11. VISIUAL POSITION INDICATOR
    The visual position indicator is directly mounted onto the center drive column to provide the visual position of the valve.
12. END STOPPERS
    1 each for open & close position (adjustable), are for over travel protection.
13. POTENTIOMETER - optional
    Is available on request, is to provide & transmit remote indication of valve position.
14. MOUNTING & ADAPTATION
    Bottom flange mounting dimension conform to ISO 5211. A adaptor drive bushing is provided for every electric actuator, is removable and for machining to suite valve stem size.

Modulating Service with TCM

Actuator with Ball Valve for On/Off Service

Application

For quarter turn valves automation used in heating & ventilation, air-conditioning, water treatment works, power generation, petrochemical plants, oil storage facilities, chemical plants, effluent treatment work, pulp & paper mills and shipbuilding industry.

Structure

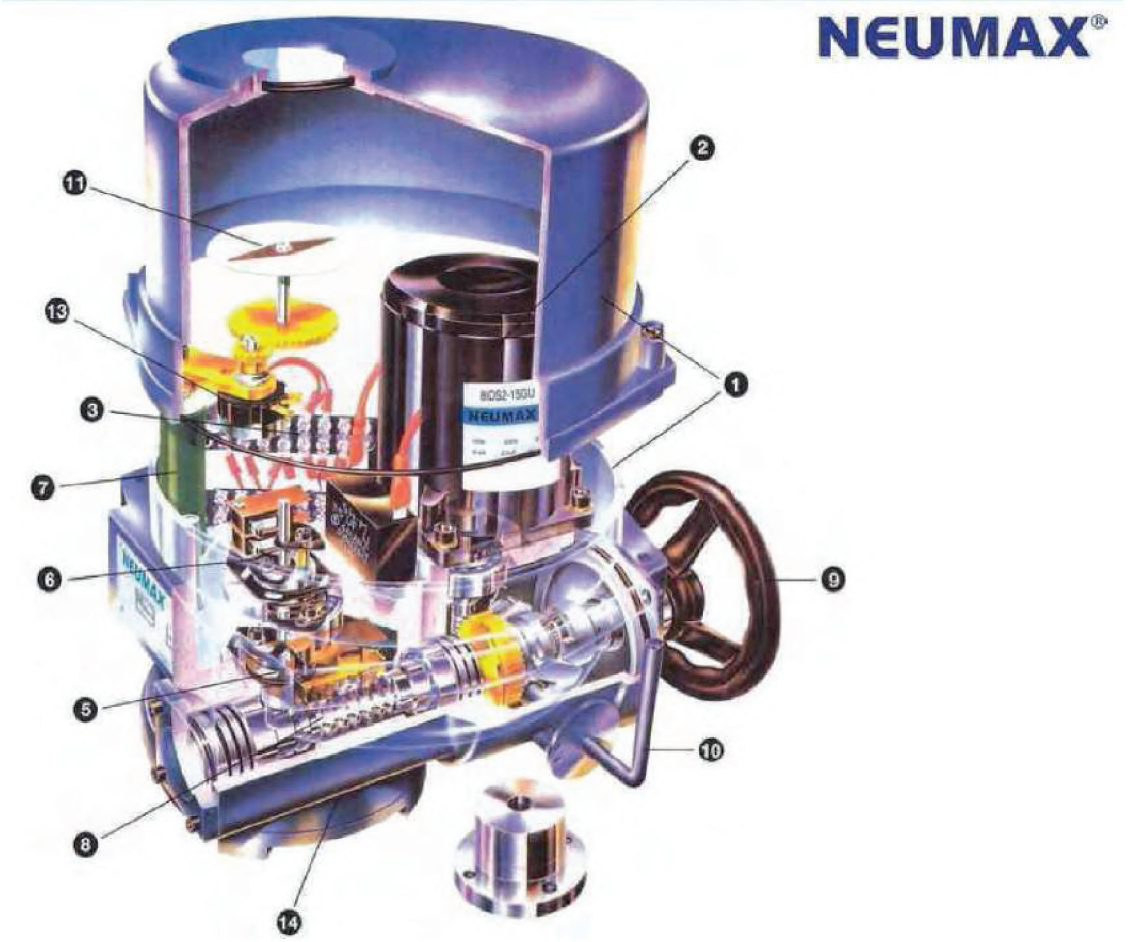

Technical parameters

Item / Type	Model	Output Turque (N.m)	Output Speed (r/min)	Rate current (A)	Operation time for 90 Deg (Sec)	Weight (kg)
QT1	QT04-0.9	40	0.9	0.4	17.5	12
	QT06-0.9	60				
	QT09-0.9	90		0.9		
QT2	QT10-0.7	100	0.7		20.6	15
	QT15-0.7	150				
	QT19-0.7	190		1.1		
QT3	QT28-0.6	280	0.6	0.9	26.3	20
	QT38-0.6	380		1.25		
	QT50-0.6	500		1.7		
QT4	QT60-0.5	600	0.5	2.3	29.4	30
	QT80-0.5	800		2.7		
	QT100-0.5	1000		2.7		
QT3X	QT120-0.2	1200	0.2	2.3	45	50
QT4X	QT150-0.2	1500	0.2	2.7	50	60
	QT200-0.2	2000		2.7		
	QT250-0.2	2500		2.7		

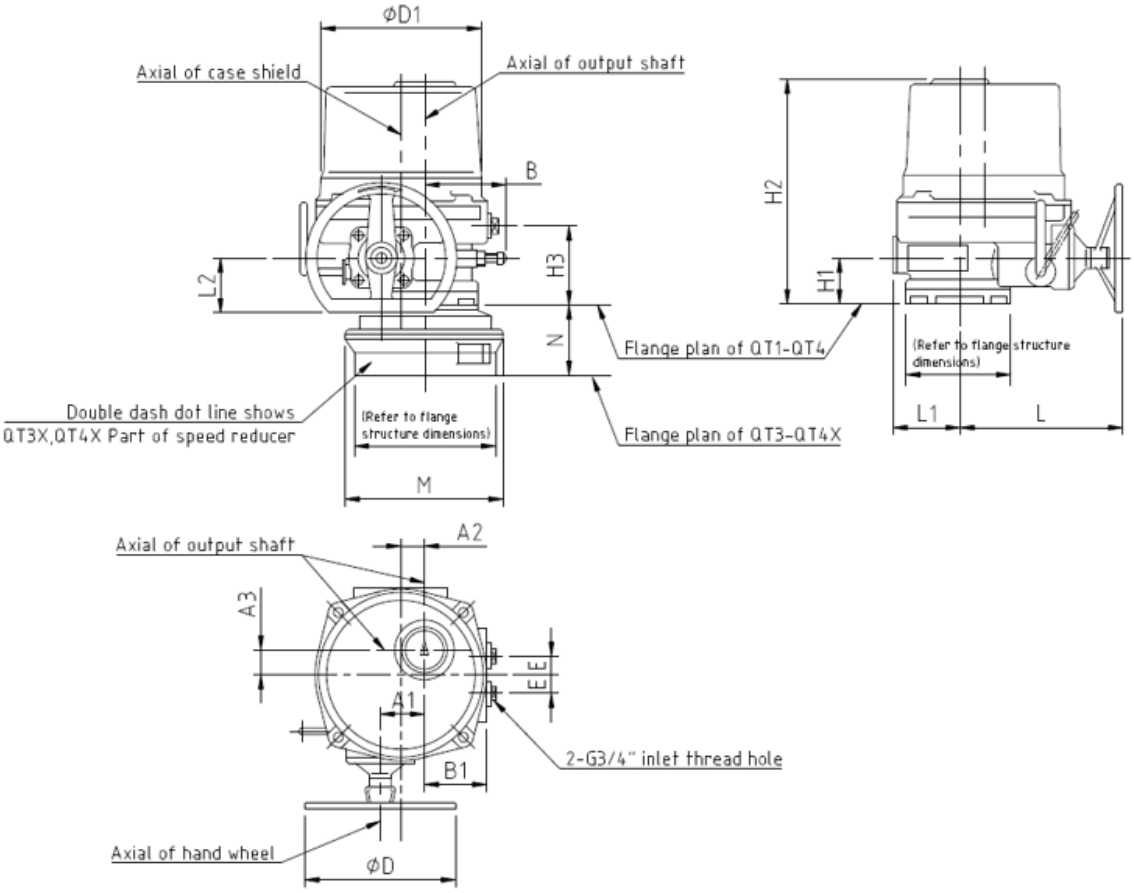

QT Dimention (mm)

Code / Type	A1	A2	A3	B	B1	ØD1	ØD2	E	H1	H2	H3	L	L1	N	M
QT1	44	17	36	75	68	102	170	27.5	60	256	109	179	62		
QT2	49.5	22.5	30	85	77.5	200	200		64	263	113	187	85		
QT3	60	33	35	100	77	250	220		70	298	119	202	88		
QT4	70	43	38	115	87		260		78	342	127	225	106		
QT3X	60	33	35	100	77	250	220		70	298	119	202	88	125	Ø216
QT4X	70	43	38	115	87		260		78	342	127	225	106	135	Ø258

Type	Model	Mounting Flange Code	
QT1	QT04-0.9	F05	
	QT06-0.9	F05	
	QT09-0.9	F07	
QT2	QT10-0.7	F07	F10
	QT15-0.7	F07	F10
	QT19-0.7	F07	F10
QT3	QT28-0.6	F10	F12
	QT38-0.6	F10	F12
	QT50-0.6	F10	F12
QT4	QT60-0.5	F10	
	QT80-0.5	F10	F14
	QT100-0.5	F10	F14
QT3X	QT120-0.2	F10	F14
QT4X	QT150-0.2	F14	
	QT200-0.2	F14	
	QT250-0.2	F14	

Mounting Flange Code	A	B (depth)	C
F05	M6	12	50
F07	M8	14	70
F10	M10	18	102
F12	M12	20	125
F14	M16	26	140

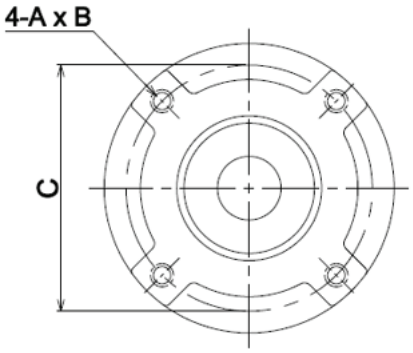

Standard Specification

Housing & Cover	Aluminium, Anodized
Enclosure	Waterlight IP67, Nema4 and 6
Ambient Temp	-30°C to +70°C
Power Supply (60Hz/50Hz)	110/220VAC, 1 Phase 380/440VAC, 3 Phase
Control Power	110/220VAC, 1 Phase, 60/50Hz
Torque Switches	2 x SPDT for QT15 and above
Limit Switches	2 x SPDT 15A
Stall Protection	Built-in Thermal Protection
Travel Angle	90°C ± 5°C
Indicator	Continuous Position Indicator
Manual Override	HAND/AUTO Declutching Mechanism
Self Locking	Provide by means of worm Gearing
End Stopper	External Adjustable Screws
Space Heater	20W for Anti-Condensation
Conduit Entries	Two G3/4”
Lubrication	MoS2 Lithium Base Grease
Materials	Steel, Aluminium Alloy, Al Bronze
External Coating	Dry Powder, Epoxy-Polyester Munsell No. FJ-002

Optional Items

ALS	Additional 2 x SPDT Auxiliary Limit Switches
EXT	Traval Angle 120º, 135º,180º, 270º
LCB	Local Control Box (1) Local/Remote Selector Switch (2) Open/Stop/Close Selector Switch
POT	Potentiometer 1k Ohm
CPT	Current Position Transmitter Output; 4-20mA DC
PCM	Proportional Control Module Input signal: 4-20mA, 1-5V DC Output signal: 4-20mA DV
EXP	Explosion & Water Proof Enclosure Exd II BT4 IP67

DZR BRASS GATE VALVE

SPECIFICATION

BS 5154, EN 12288
SCREWED-IN BONNET • SOLID WEDGE DISC
NON-RISING STEM • INTEGRAL SEAT • ASBESTOS FREE
THREADED TO BS 21 (ISO 7) / ASME B1.20.1 OR NPT

PRESSURE RATINGS

Working Pressure	20 bar C.W.P 9 bar at 180°C
Testing Pressure	Shell: 30 bar Hydrostatic Seat: 22 bar Hydrostatic or 6 bar Air
Working Temperature	-10° ~ 180°C
Suitable Media	Water & Oil

MATERIALS

Part	Material	BS EN
Body	DZR Brass	12165 CW602N
Bonnet	DZR Brass	12165 CW602N
Disc	DZR Brass	12165 CW602N
Stem	DZR Brass	12165 CW602N
Packing	PTFE	
Packing Nut	Brass	12165 CW614N
Gland	Brass	12165 CW614N
Handwheel	Aluminium	

DIMENSIONS

Size		L		H		D	
mm	inch	mm	inch	mm	inch	mm	inch
15	½	48.0	1.9	70.0	2.8	50.0	2.0
20	¾	50.5	2.0	81.0	3.2	60.0	2.4
25	1	58.0	2.3	98.5	3.9	70.0	2.8
32	1¼	63.5	2.5	118.5	4.7	80.0	3.2
40	1½	67.5	2.7	129.5	5.1	90.0	3.5
50	2	73.0	2.9	164.5	6.5	100.0	4.0

Note:
1. Design and specifications are subject to change without prior notice.

D-BGV

PN 20

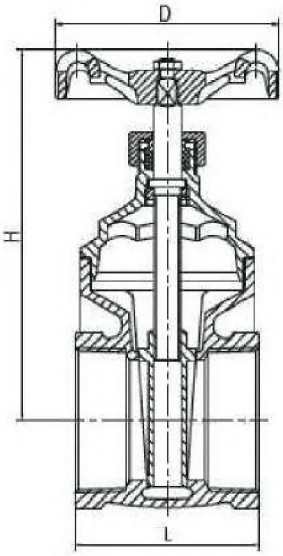

BRONZE GATE VALVE

SPECIFICATION

MSS SP-80
SCREWED-IN BONNET • SOLID WEDGE DISC
NON-RISING STEM • INTEGRAL SEAT • ASBESTOS FREE
THREADED TO BS 21 (ISO 7) / ASME B1.20.1 OR NPT

PRESSURE RATINGS

Working Pressure	25 bar C.W.P. 10.3 bar Saturated Steam
Testing Pressure	Shell: 37.5 bar Hydrostatic Seat: 27.5 bar Hydrostatic 80psi (5.5 bar) Air
Working Temperature	-10°C ~ 180°C
Suitable Media	Water & Oil

MATERIALS

Part	Material	ASTM
Body	Bronze	C83600
Bonnet	Bronze (for size 15A~25A) Brass (for size 32A~100A)	C83600 C37700
Disc	Bronze	C83600
Stem	Brass	C37700
Packing	PTFE	
Packing Nut	Brass	C36000
Gland	Brass	C36000
Handwheel	Aluminium	

DIMENSIONS

Size		L		H		D	
mm	inch	mm	inch	mm	Inch	Mm	inch
15	½	48.0	1.9	72.5	2.9	60.0	2.4
20	¾	50.5	2.0	84.5	3.2	70.0	2.8
25	1	59.5	2.3	99.0	3.9	70.0	2.8
32	1¼	65.5	2.6	117.0	4.6	80.0	3.2
40	1½	70.5	2.8	131.0	5.2	90.0	3.5
50	2	75.0	2.9	164.0	6.5	100.0	4.0

Note:
1. Design and specifications are subject to change without prior notice.

GGV

Class 150

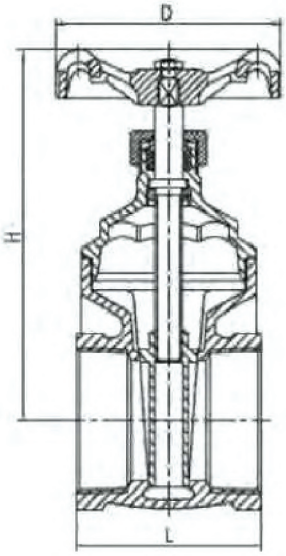

BRONZE RISING STEM GATE VALVE

SPECIFICATION

MSS SP-80
SCREWED-IN BONNET • SOLID WEDGE DISC
RISING STEM • INTEGRAL SEAT • ASBESTOS FREE
THREADED TO BS 21 (ISO 7) / ASME B1.20.1 OR NPT

PRESSURE RATINGS

Working Pressure	300 psi (20.7 bar) C.W.P. 150 psi (10.3 bar) Saturated Steam
Testing Pressure	Shell: 450 psi (31 bar) Hydrostatic Seat: 330 psi (22.7 bar) Hydrostatic 80psi (5.5 bar) Air
Working Temperature	-10°C ~ 180°C
Suitable Media	Water & Oil

MATERIALS

Part	Material	ASTM
Body	Bronze	C83600
Bonnet	Bronze	C83600
Disc	Bronze	C83600
Stem	Brass	C37700
Packing	PTFE	
Packing Nut	Brass	C37700
Gland	Brass	C37700
Handwheel	Aluminium	

DIMENSIONS

Size		L		H		D	
mm	inch	mm	inch	mm	Inch	Mm	inch
15	½	48.0	1.9	100.5	4.0	51.0	2.0
20	¾	50.5	2.0	124.5	4.9	64.0	2.5
25	1	59.5	2.3	147.5	5.8	67.0	2.6
32	1¼	65.5	2.6	168.0	6.6	76.0	3.0
40	1½	68.5	2.7	188.5	7.4	89.0	3.5
50	2	75.0	2.9	233.0	9.2	102.0	4.0

Note:
1. Design and specifications are subject to change without prior notice.

R-GGV

Class 150

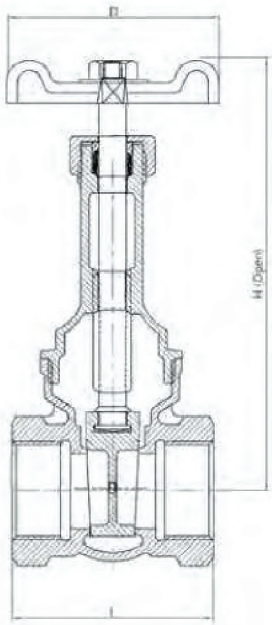

BRONZE Y TYPE STRAINER

SPECIFICATION

Y-PATTERN BODY • SCREWED CAP
STAINLESS STEEL SCREEN • ASBESTOS FREE
THREADED TO BS 21 (ISO 7) / ASME B1.20.1 OR NPT

PRESSURE / TEMPERATURE RATINGS

Working Pressure	25 bar C.W.P 10.3 bar Saturated Steam
Testing Pressure	37.5 bar Hydrostatic 80psi (5.5 bar) Air
Working Temperature	-10ºC ~ 180ºC
Suitable Media	Water & Oil

MATERIALS

Part	Material	ASTM
Body	Bronze (Gunmetal)	B62 C83600
Cap	Bronze (Gunmetal)	B62 C83600
Screen	Stainless Steel	AISI 304
Gasket	Non-Asbestos Sheet	

STANDARD SCREENS

Size		Hole Diameter		Opening
mm	inch	mm	inch	(%)
15 ~ 50	½ ~ 2	1.31 x 0.76	0.05 x 0.03	35

DIMENSIONS

Size		L		H	
mm	inch	mm	inch	mm	inch
15	½	52.0	2.0	40.5	1.6
20	¾	66.5	2.6	48.0	1.9
25	1	81.5	3.2	57.0	2.2
32	1¼	93.0	3.7	73.6	2.9
40	1½	108.0	4.3	76.0	3.0
50	2	125.0	4.9	94.0	3.7

Note:

1. Design and specifications are subject to change without prior notice.

GYS-L

Class 150

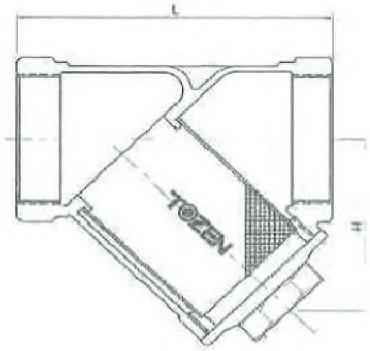

DZR BRASS Y TYPE STRAINER

SPECIFICATION

Y-PATTERN BODY • SCREWED CAP
STAINLESS STEEL SCREEN • ASBESTOS FREE
THREADED TO BS 21 (ISO 7) / ASME B1.20.1 OR NPT

PRESSURE / TEMPERATURE RATINGS

Working Pressure	20 bar C.W.P
Testing Pressure	30 bar Hydrostatic 6 bar Air
Working Temperature	-10°C ~ 180°C
Suitable Media	Water & Oil

MATERIALS

Part	Material	ASTM
Body	DZR Brass	B62 C35330
Cap	DZR Brass	B62 C35330
Screen	Stainless Steel	AISI 304
Gasket	Non-Asbestos Sheet	

STANDARD SCREENS

Size		Hole Diameter		Opening
mm	inch	mm	inch	(%)
15 ~ 50	½ ~ 2	1.31 x 0.76	0.05 x 0.03	35

DIMENSIONS

Size		L		H	
mm	inch	mm	inch	mm	inch
15	½	55.5	2.2	37.0	1.5
20	¾	66.5	2.6	47.0	1.9
25	1	81.0	3.2	55.0	2.2
32	1¼	96.0	3.8	71.0	2.8
40	1½	111.0	4.4	78.0	3.1
50	2	128.0	5.0	95.5	3.8

Note:

1. Design and specifications are subject to change without prior notice.

D-BYS

PN20

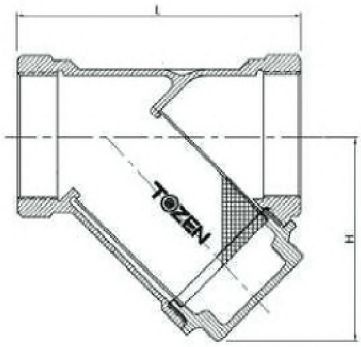

BRONZE BALL VALVE

SPECIFICATION

MSS SP-110
SCREWED BODY CAP • FULL BORE
BLOW-OUT PROOF STEM • PTFE SEAT
THREADED TO BS 21 (ISO 7) / ASME B1.20.1 OR NPT

PRESSURE RATINGS

Working Pressure	42 bar C.W.P 10.3 bar @ 186°C
Testing Pressure	Shell: 62 bar Hydrostatic Seat: 45.5 bar Hydrostatic 80psi (5.5 bar) Air
Working Temperature	-10°C ~ 180°C
Suitable Media	Water & Oil

MATERIALS

Part	Material	ASTM
Body	Bronze (Gunmetal)	C83600
Cap	Bronze (Gunmetal)	C83600
Ball	Hard Chromed Brass	C37700
Seat	PTFE	
Stem	Brass	C37700
Seal	PTFE	
Gland	Brass	C36000
Handle	Steel	

DIMENSIONS

Size		L		H		D	
mm	inch	mm	Inch	mm	inch	mm	inch
10	3/8	45.8	1.8	49.0	1.9	87.0	3.4
15	1/2	54.4	2.1	49.0	1.9	96.0	3.8
20	3/4	62.8	2.5	53.0	2.1	96.0	3.8
25	1	77.0	3.0	66.5	2.6	127.0	5.0
32	1-1/4	85.6	3.4	72.5	2.9	127.0	5.0
40	1-1/2	94.1	3.7	79.0	3.1	142.0	5.6
50	2	110.8	4.4	88.5	3.5	165.0	6.5

Note:
1. Design and specifications are subject to change without prior notice.

GBV

Type 600

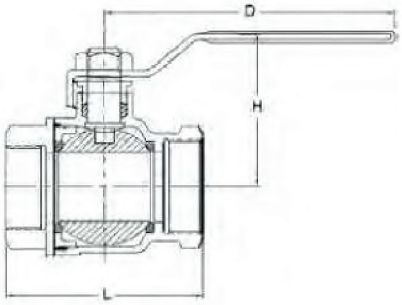

BRONZE SWING CHECK VALVE

SPECIFICATION

MSS SP-80
SCREWED CAP • SWING TYPE DISC • INTEGRAL SEAT
THREADED TO BS 21 (ISO 7) / ASME B1.20.1 OR NPT

PRESSURE RATINGS

Working Pressure	300 psi (20.7 bar) C.W.P. 150 psi (10.3 bar) Saturated Steam
Testing Pressure	Shell: 450 psi (31 bar) Hydrostatic Seat: 330 psi (22.7 bar) Hydrostatic 80psi (5.5 bar) Air
Working Temperature	-10°C ~ 180°C
Suitable Media	Water & Oil

MATERIALS

Part	Material	ASTM
Body	Bronze	C83600
Cap	Bronze	C83600
Disc	Bronze	C83600
Hanger	Bronze	C83600
Disc Nut	Brass	C36000
Plug Nut	Brass	C36000

DIMENSIONS

Size		L		H	
mm	inch	mm	inch	mm	Inch
15	½	48.5	1.9	30.5	1.2
20	¾	55.5	2.2	38.5	1.5
25	1	71.5	2.8	43.5	1.7
32	1¼	82.2	3.2	51.0	2.0
40	1½	88.5	3.5	60.5	2.4
50	2	109.0	4.3	76.5	3.0

Note:
1. Design and specifications are subject to change without prior notice.

GSCV

Class 150

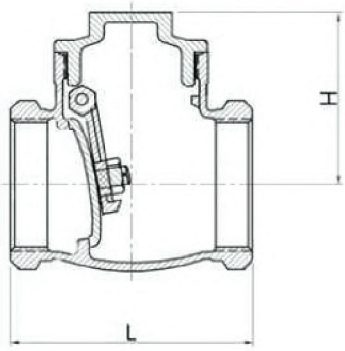

BRONZE GLOBE VALVE

GGLV

Class 150

SPECIFICATION

MSS SP-80
SCREWED-IN BONNET SWIVEL DISC
RISING STEM ASBESTOS FREE
THREADED TO BS 21 (ISO 7) / ASME B1.20.1
SIZE RANGE : 15 MM(1/2") – 50 mm (2")

PRESSURE RATINGS

Working Pressure	300 psi (20.7 bar) WOG Non-Shock 150 psi (10.3 bar) Saturated Steam
Testing Pressure	Shell: 450 psi (31 bar) Hydrostatic Seat: 330 psi (22.7 bar) Hydrostatic 80psi (5.5 bar) Air

MATERIALS

Part	Material	ASTM	BS
Body	Bronze(Gunmetal)	B62 C83600	1400 LG2
Bonnet	Bronze(Gunmetal)	B62 C83600	1400 LG2
Disc	Bronze(Gunmetal)	B62 C83600	1400 LG2
Stem	Brass Rod	B124 C38800	2874 CZ122
Packing	PTFE		
Packing Nut	Brass Rod	B124 C38800	2874 CZ122
Gland	Brass Rod	B124 C38800	2874 CZ122
Handwheel	Cast Iron	A48 No.35	1452 Gr.260

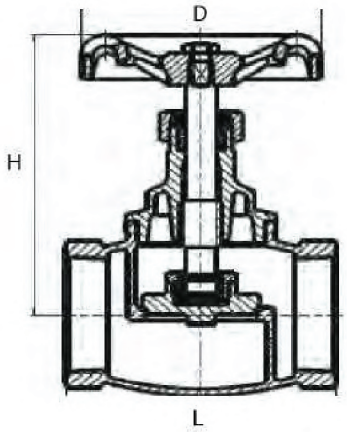

DIMENSIONS

Size		L		H		L	
mm	inch	mm	inch	mm	inch	mm	inch
15	1/2	52	2.0	70	2.8	60	2.4
20	3/4	63	2.5	82	3.2	65	2.6
25	1	76	3.0	92	3.6	70	2.8
32	1-1/4	84	3.3	108	4.3	78	3.1
40	1-1/2	98	3.9	120	4.7	92	3.6
50	2	116	4.6	140	5.5	103	4.1

Note:
1. If used for gas application, please consult our sales office
2. Design and specifications are subject to change without prior notice.

TOZEN

A joint reliance

TOZEN INDUSTRIAL CO., LTD.
3388/62 18TH FLOOR, SIRINRAT BLDG.,
RAMA IV Rd., BANGKOK 10110 THAILAND
TEL : (66) 02029-0100
FAX : (66) 02029-0111
E-MAIL : sales@tt.tozen.com
URL : www.tozen.co.th

TOZEN CORPORATION

8-4, ASAHI YOSHIKAWA
SAITAMA 342-008 JAPAN
TEL : 048-993-1030
FAX : 048-993-1038